DF30-C-MD-TCP

User manual

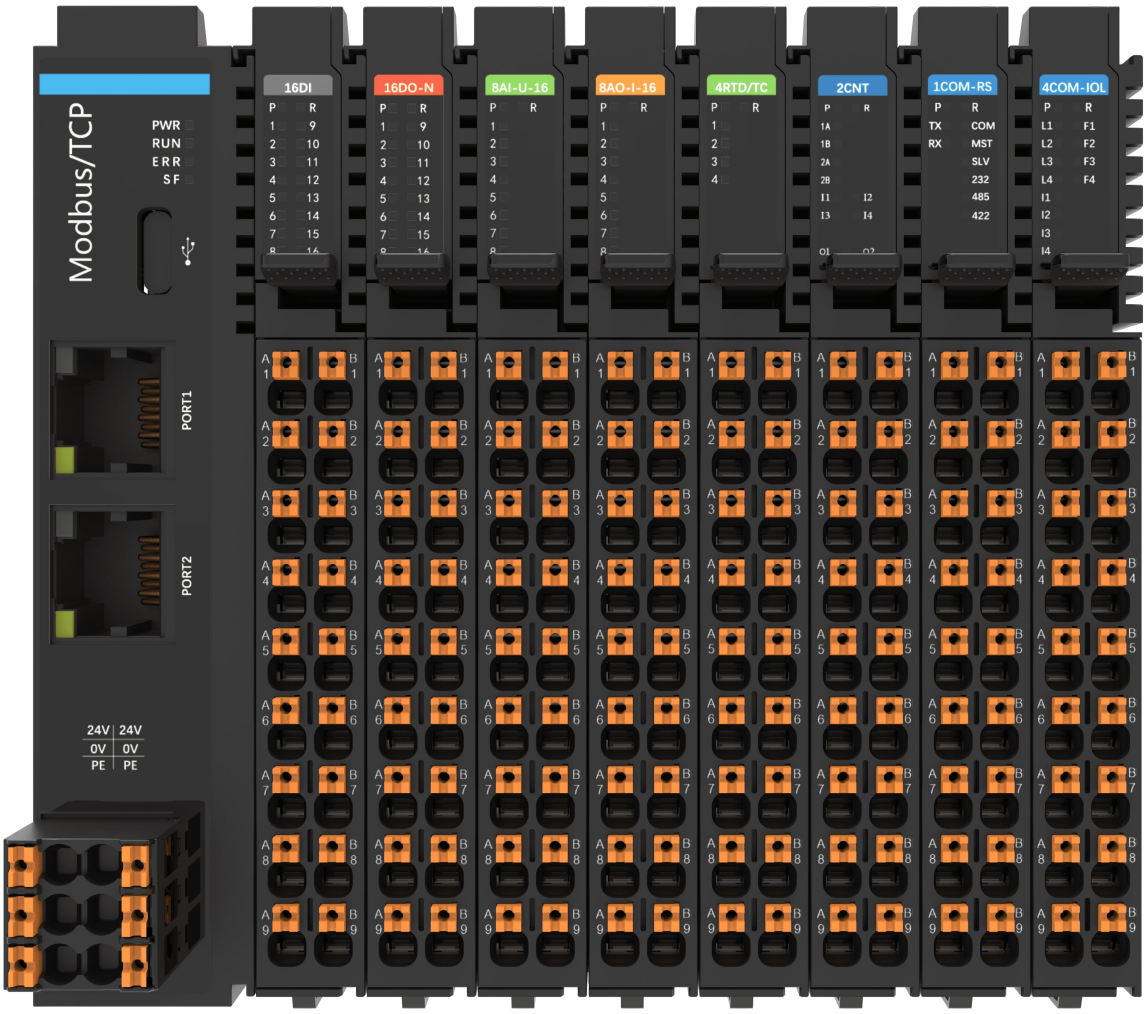

1 Preface

■ Introduction

The DF30-C-MD-TCP communication interface module (hereinafter referred to as this module) is connected to the Modbus/TCP network as a Modbus/TCP slave station, and can be expanded through this module to expand local modules such as digital, analog, temperature, pulse, and communication gateway.

This manual explains the basic information of the product, electrical installation, programming examples, mechanical installation, etc.

■ Meet the standards

Please refer to the table below for relevant certification categories, directives and standards.

Certification Name	Instruction Name		Meet the standards
CE certified	EMC directive	2014/30/EU	EN 61131-2
	LVD instructions	2014/35/EU	EN 61010-1 EN 61010-2-201
	RoHS Directive	2011/65/EU amended by (EU) 2015/863	EN IEC 63000

■ More information

■ Version change history

Revision date	Release version	Changes
2025-02-28	2025-2-28	The manual was published for the first time

■ Warranty Statement

Under normal use, if the product fails or is damaged, we will provide warranty service within the warranty period (please refer to the order form for details of the product warranty period). If the warranty period is exceeded, the repair fee will be charged.

During the warranty period, repair fees will be charged for product damage caused by the following situations.

- Failure to operate this product as specified in the manual results in product damage.
- Product damage caused by fire, water damage, abnormal voltage.
- Use this product for abnormal functions, causing product damage.
- Product damage caused by exceeding the scope of use specified by the product.
- Secondary damage to products caused by force majeure (natural disasters, earthquakes, lightning strikes).。

The relevant service fees are calculated according to the manufacturer's unified standards, and if there is a contract, it will be dealt with on the principle of contract priority.

For detailed warranty descriptions, please refer to the Product Warranty Card.

2 Safety precautions

■ Safety Statement

➢ This chapter describes the safety precautions that need to be taken into account when using this product. Before using this product, please read the instruction manual and properly understand the relevant information on safety precautions. Failure to comply with the matters agreed in the safety precautions may result in death, serious injury, or damage to the equipment。

➢ The "hazards", "warnings" and "precautions" in the manual do not represent all safety matters to be observed and are only in addition to all safety precautions.

➢ This product should be used in an environment that meets the requirements of the design specifications, otherwise it may cause failure, and abnormal functions or damage to parts caused by non-compliance with relevant regulations are not within the scope of product quality assurance.

➢ The company will not bear any legal responsibility for personal safety accidents or property damage caused by non-compliance with the content of this book or illegal operation of products.

■ Security level definition

Danger:

Indicates that if not done as prescribed, it will result in death or serious bodily harm.

Warning:

Indicates that failure to do so may result in death or serious bodily harm.

Attention:

Indicates that if not done as prescribed, it may result in minor bodily injury or damage to the equipment.

■ Safety precautions

➢ The illustration of the product in this instruction manual, sometimes to show the details of the product, is the state of the product with the outer cover or safety cover

removed. When using this product, be sure to install the cover or cover according to the regulations and operate according to the instructions in the instruction manual.

- The product illustrations in this manual are examples only and may differ slightly from the products you ordered, please refer to the actual products ordered.
- Operators must take mechanical protective measures to protect personal safety, please wear and wear necessary protective equipment, such as wearing anti-smashing shoes, safety clothing, safety goggles, protective gloves and sleeves, etc.

Unboxing and acceptance
Attention: ● When unpacking, you will find that the product and product accessories are damaged, rusted, signs of use and other problems, please do not install! ● Do not install if you find water inside the product when you open the box, missing parts, or damaged parts! ● Please check the packing list carefully, if you find that the packing list does not match the product name, do not install it! ● Before unpacking, please check whether the outer packaging of the equipment is intact, whether it is damaged, soaked, damp, deformed, etc. ● Please open the package in the order of layers, it is strictly forbidden to beat violently! ● When unpacking, please check whether there is any damage, rust, bruises, etc. on the surface of the equipment and accessories. ● After unpacking, please carefully check the packing list and check whether the equipment and accessories are complete.
Storage and transportation
Attention: ● When handling the product, be sure to lift it gently and always pay attention to the objects under your feet to prevent tripping or falling, otherwise there is a risk of injury or product damage! ● When handling the product with your bare hands, be sure to hold on to the product shell to avoid the product parts falling, otherwise there is a risk of injury!

● Please store and transport in strict accordance with the storage and transportation conditions required by the product, otherwise there is a risk of damage to the product.

● Avoid storage and transportation in places such as water splashes and rain, direct sunlight, strong electric fields, strong magnetic fields, and strong vibrations.

● Avoid storing the product for more than 3 months, and if the storage time is too long, please carry out stricter protection and necessary inspections.

● Please pack the product tightly before transporting it by vehicle, and use a closed box for long-distance transportation.

● It is strictly forbidden to transport this product in mixed packaging with equipment or items that may affect or damage this product.

When installing

Danger：是

● Only professionals with electrical knowledge who have been trained in electrical equipment can operate it. Non-professional operation is strictly prohibited!

Warning:

● Be sure to read the product instruction manual carefully and safety precautions before installation!

● Do not install this product in places with strong electric fields or strong electromagnetic interference!

● Before proceeding with the installation work, ensure that the installation location is mechanically strong enough to support the weight of the equipment, otherwise it will lead to mechanical hazards.

● When performing installation work, do not wear loose clothes or accessories, otherwise there may be a risk of electric shock!

● When installing the product in an enclosed environment (such as inside a cabinet or chassis), cool it adequately with a cooling device (such as a cooling fan or cooling air conditioner) to meet the installation environment requirements, which may cause the product to overheat or fire.

● Modification of this product is strictly prohibited!

● When this product is installed in a cabinet or terminal equipment, the cabinet or terminal equipment needs to provide corresponding protective devices such as fireproof enclosures, electrical protective enclosures, and mechanical protective enclosures, and the protection level should comply with relevant IEC standards and local laws and regulations.

● When it is necessary to install equipment with strong electromagnetic wave interference such as transformers, please install a shielding protection device to avoid malfunctions of this product!

● Please install the product on metal and other flame-retardant objects, and do not let flammable materials touch the product or attach flammable materials to the product, otherwise there is a risk of fire.

Attention:

● When installing the product, cover the top of the product with a cloth or paper to prevent foreign objects such as metal shavings, oil, and water from entering the product during drilling and causing product failure. After the operation, please remove the cover to avoid the cover blocking the ventilation hole and affecting heat dissipation, causing the product to heat abnormally.

● Resonance can occur when variable speed operation is performed on machinery running at a constant speed. In this case, installing anti-vibration rubber under the motor frame or using a vibration suppression function can effectively reduce resonance.

When wiring

Danger:

● Non-professionals are strictly prohibited from equipment installation, wiring, maintenance, inspection or component replacement!

● Before wiring, disconnect all equipment. After cutting off the power supply, there is residual voltage in the internal capacitor of the device, please wait for at least the time specified on the warning label of the product before wiring and other operations. Measure the DC voltage of the main loop and confirm that it is below the safe voltage, otherwise there will be a risk of electric shock.

● Please disconnect the wiring, remove the product cover, or touch the circuit board while

the power supply is cut off, as there is a risk of electric shock.

● Be sure to ensure good grounding of the equipment and products, otherwise there is a risk of electric shock. Grounding should be done separately or single-point grounding, and public grounding should not be used.

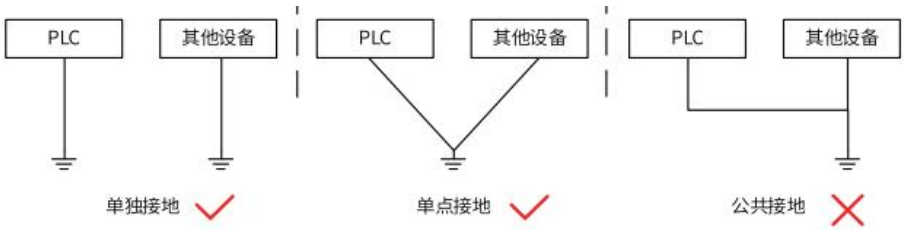

Warning:

● It is strictly forbidden to connect the input power supply to the output of the device or product, otherwise it will cause damage to the equipment or even cause a fire.

● When connecting the drive equipment with the motor, be sure to ensure that the product and the motor terminals are in the correct sequence to avoid reverse rotation of the motor.

● The cables used during wiring must meet the corresponding wire diameter and shielding requirements, and the shielding layer of shielded cables needs to be reliably grounded at one end!

● Once the wiring is complete, ensure that all cables are wired correctly and that there are no falling screws, spacers, or exposed cables inside the product, otherwise there may be a risk of electric shock or damage to the product.

Attention:

● Follow the steps specified in the ESD and wear an electrostatic bracelet for wiring and other operations to avoid damaging the electrical circuits inside the device or product。

● When wiring the control loop, use a double-stranded shielding wire to connect the shield to the grounding terminal of the product for grounding, otherwise it will cause the product to act abnormally.

When powering up

Danger:

● Before powering on, make sure the product is properly installed, the wiring is secure, and the motor unit allows for restarting.

● Before powering on, please make sure that the power supply meets the product requirements to avoid causing product damage or fire!

● It is strictly forbidden to open the product cabinet door or product protective cover in the state of power, touch any terminal block of the product, or disassemble any device or part of the product, otherwise there is a risk of electric shock!

Warning:

● After the wiring operation and parameter setting are completed, please conduct a test run of the machine to confirm that the machine can operate safely, otherwise it may cause injury to personnel or damage to the equipment.

● Before powering on, make sure that the rated voltage of the product is the same as the power supply voltage. If the power supply voltage is used incorrectly, there is a risk of fire.

● Before powering on, make sure that there are no people around the product, motor and machinery, otherwise it may cause injury or death.

Runtime

Danger:

● It is strictly forbidden for non-professionals to operate the product, otherwise there is a risk of injury or death!

● It is strictly forbidden to touch any terminal block of the equipment and disassemble any device or part of the product in the operating state, otherwise there is a risk of electric shock!

Warning:

● It is strictly forbidden to touch the device shell, fan or resistor to test the temperature, otherwise it may cause burns!

● During operation, avoid other items or metal objects falling into the equipment, otherwise it may cause fire or product damage!

Maintenance

Danger:

● Non-professionals are strictly prohibited from equipment installation, wiring, maintenance, inspection or component replacement!

● It is strictly forbidden to maintain the equipment in the state of power, otherwise there is a risk of electric shock!

● After cutting off the power to all devices, wait at least for the time specified on the warning label on the product before performing equipment maintenance.

● When using a PM motor, an induced voltage is generated on the motor terminals during motor rotation even if the power to the product is turned off. Do not touch the motor terminals, otherwise there may be a risk of electric shock.

Warning:

● Please conduct daily and regular inspections and maintenance of equipment and products in accordance with equipment maintenance and maintenance requirements, and make maintenance records.

When repairing

Danger:

● Non-professionals are strictly prohibited from equipment installation, wiring, maintenance, inspection or component replacement!

● It is strictly forbidden to carry out equipment maintenance in the state of power, otherwise there is a risk of electric shock!

● After cutting off the power to all equipment, please wait at least the time specified on the warning label on the product before performing equipment inspection, repair, etc. operations.

Warning:

● Please report the equipment in accordance with the product warranty agreement.

● When a fuse blows, a circuit breaker trips, or a leakage current circuit breaker (ELCB) trips, wait at least for the time specified on the warning label on the product before turning on the power supply or operating the machine, as this may result in casualties and damage to the equipment.

● When the equipment fails or is damaged, professionals must troubleshoot and repair the

equipment and products according to the maintenance guidance, and make maintenance records.

● Please follow the product wearing parts replacement instructions for replacement.

● Do not continue to use machines that have already been damaged, as this may result in death or death or greater damage to the product.

● After replacing the equipment, be sure to check the wiring and set the parameters again.

报废时

Warning:

● Please scrap equipment and products in accordance with relevant national regulations and standards to avoid property damage or casualties!

● Scrapped equipment and products should be disposed of and recycled in accordance with industrial waste treatment standards to avoid polluting the environment.

■ Safety signage

In order to ensure safe operation, please be sure to abide by the safety signs pasted on the equipment, and do not damage or peel off the safety signs. The safety mark description is as follows:

Safety signage	Content description
	Please read the safety manual and instructions carefully before using the product, otherwise there is a risk of injury or death or damage to the product!

3 Product information

3.1 Model and nameplate description

■ Nameplate description

3.2 Part description

Light				
	LED No	Status and Meaning	LED No	Status and Meaning
	PWR	Green: The system power supply is normal	RUN	Green: It is in a normal communication state
		Green extinguishing: The system power supply is abnormal		Green extinguishing: in the initial state
	SF	Red: The device is in forced operation mode (reservation, BootLoad mode, etc.)		

		Flashing (red): Configuration error, coupler error, module error, new diagnostic information, etc
		Red extinguishing: The equipment is normal
	ERR	Red light: This product is disconnected
		Flashing (red): The expansion module configuration is inconsistent
		Red extinguishing: No communication failure

Terminal blocks	
Interface name	Functional definition
PORT1	Modbus/TCP Ethernet interface
PORT2	Modbus/TCP Ethernet interface
24V power supply	Module power input terminals
Type-C interface	Used for single board software upgrade port

DIP switch	
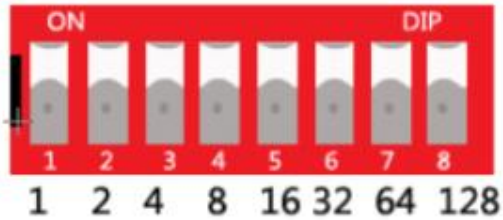	
Functional definition	The position dialed to ON is valid, each representing 1, 2, 4, 8, 16, 32, 64, 128 in turn Used to set the D segment of the adapter IP address A:B:C:D
1~253	Dial value 1~253: The last segment of the corresponding IP address A:B:C:1~253
254	Dial value 254: Reset the IP address 192.168.1.254
0 or 255	Segments A:B:C:D all use the IP information stored by the web page configuration
Factory default IP	Web page configuration save: 192.168.1.254 Dial the DIP switch to 0 The IP address is configured to 192.168.1254

3.3 Specifications

Structural parameters	
Dimensions (WxHxD)	24mm x 104mm x 80mm
Weight	103.4g
Power Parameters	
The terminal input power supply is rated voltage	24V DC (20.4V DC~ 28.8V DC)
The terminal input power supply is rated current	5A (typical at 24V DC)
The USYS backplane outputs the power supply voltage rating	5V DC (4.75V DC～5.25V DC)
The Usys backplane outputs the current rating	2A (typical at 5V)
UIN backplane output power supply rated voltage	24V DC (20.4V DC～ 28.8V DC)
The UIN backplane outputs the power supply current rating	4A (typical at 24V)
Functional parameters	
Specifications	Modbus/TCP bus, 2 RJ45, expandable 32 modules, 24VDC
Communication interface	2 RJ45 interfaces with integrated switch function
Network topology	Modbus/TCP
Communication protocols	10/100Mbps, full duplex
Communication rate	Modbus/TCP specification
Bus address settings	100 meters
Address mapping	Standard and enhanced diagnosis
Diagnosis	Electrical isolation from the site
Isolation method	Class 5 twisted pairs

Transmission medium	Modbus/TCP bus, 2 RJ45, expandable 32 modules, 24VDC
Software parameters	
IP ADDRESS ALLOCATION	static IP allocation (software configuration via web page, hardware DIP switch configuration), Support reset to default address (192.168.1.254)
Port number	502 (Modbus TCP standard port).
Web configuration	Configure parameters via web pages
Number of client connections	Support 7
The total amount of input and output data	Maximum 10,000 bytes
Function code support	01/02/03/04/05/06/15/16
Firmware upgrade method	BootLoader mode upgrade, serial port (UART) interface, YMODEM protocol
Wiring parameters	
Connection technology: communication/fieldbus	Modbus/TCP IO: 2 x RJ-45
Connectivity technology	PUSH-IN type terminal blocks
Connection type	System/field power/input
Crimping area of the wire	0.34～1.5mm²
Stripping length	10mm
Installation method:	DIN-35 TYPE RAIL
Material parameters	
Color	Pantone 419C
Shell material	PC PLASTIC
Environmental requirements	
Allowable ambient temperature (during operation)	-20～55℃
Allowable ambient	-40～85℃

temperature (storage)	
Types of protection	IP20
Contamination level	2. Comply with IEC 61131-2 standard
Working altitude	0～2000m
Relative humidity (non-condensing)	5～95%RH
Anti-vibration	1g, in accordance with IEC 60068-2-6 standard
Impact resistance	15g, in accordance with IEC 60068-2-27
EMC ANTI-INTERFERENCE RATING	Zone B, IEC61131-2
Corrosion resistance	Compliant with IEC 60068-2-42 and IEC 60068-2-43 standards

3.4 Wiring schematic

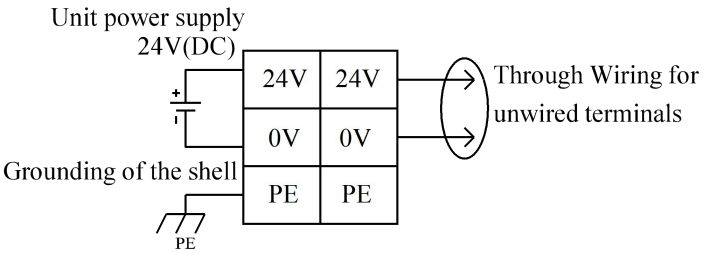

3.5 System block diagram

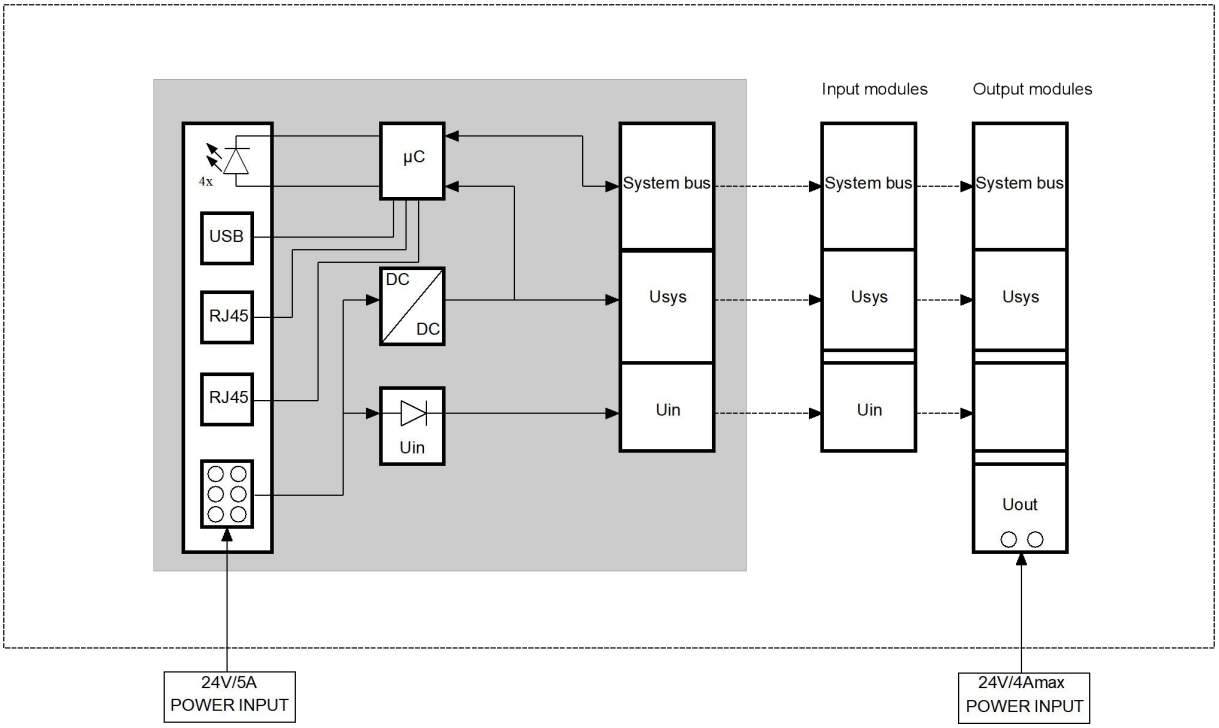

3.6 Installation and disassembly

3.6.1 Mounting dimensions

➢ The mounting dimension information is shown in millimeters (mm) as shown in the figure below.。

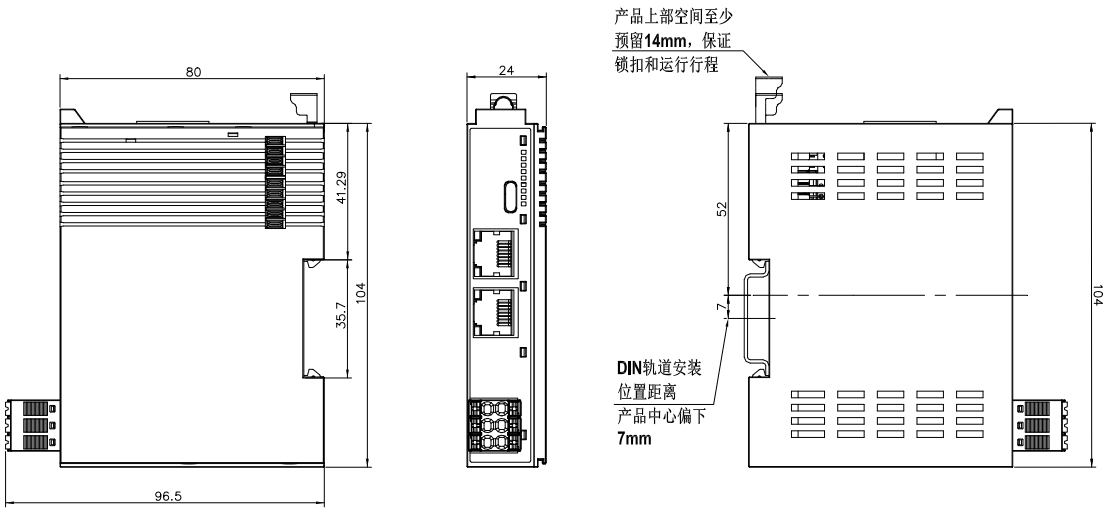

➢ Connect the cables

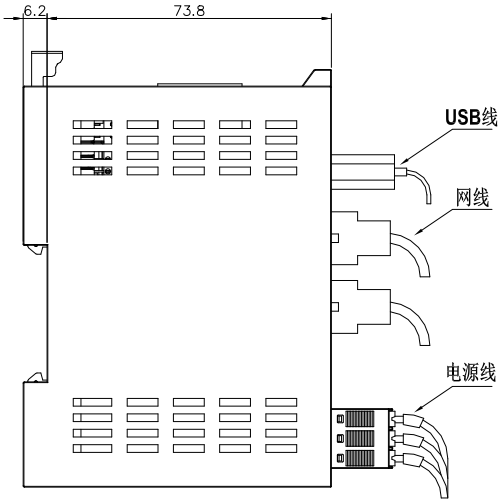

➢ tail cover

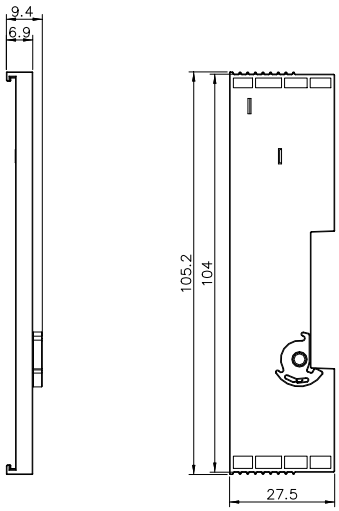

3.6.2 Installation guide

➢ The inter-module assembly is sliding to install via the top and bottom rails of the module, as shown in the figure below.

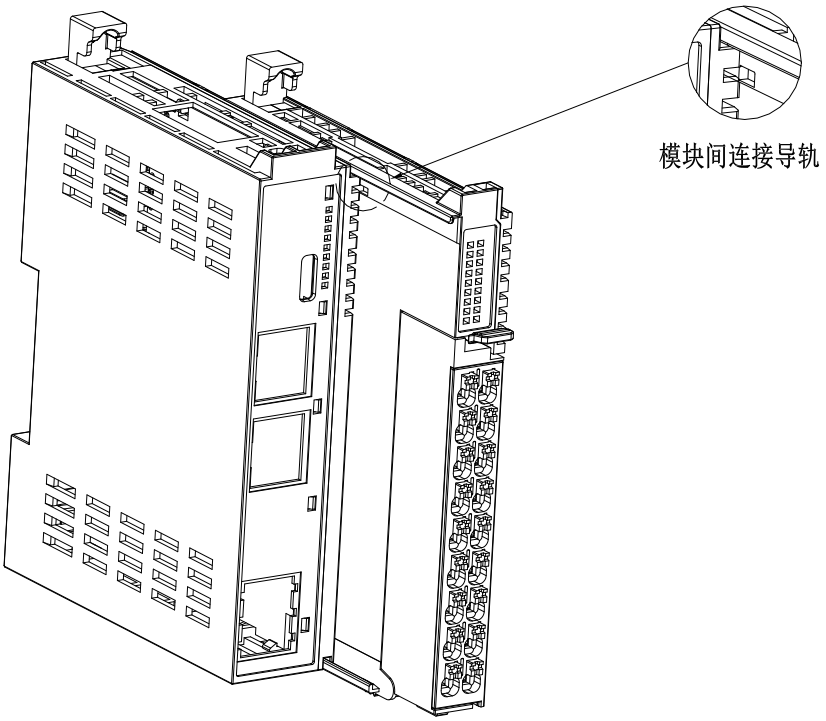

➢ When installing, align the module with the DIN rail, press the module in the direction indicated by the arrow, and there will be a noticeable clamping sound after installation, as shown in the figure below.

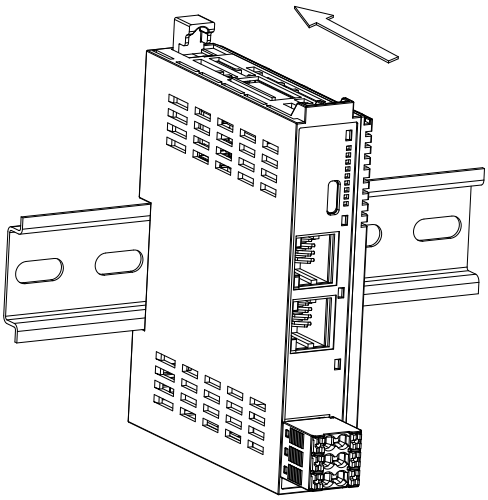

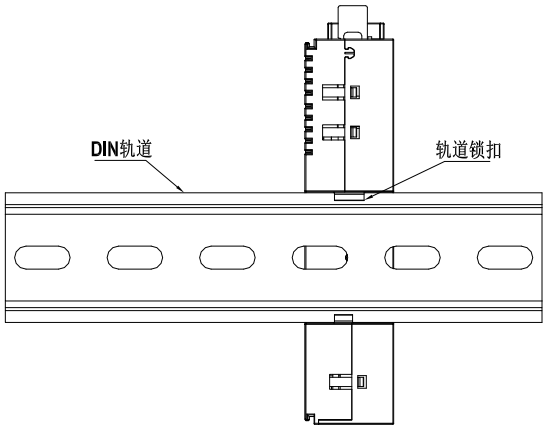

➢ Confirm that the DIN rail lock of the module is locked, and the locking and unlocking status of the rail lock are shown in the figure below。

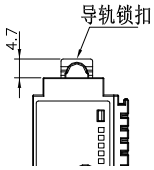

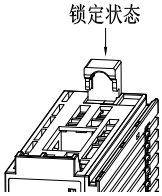

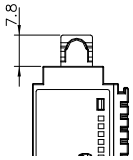

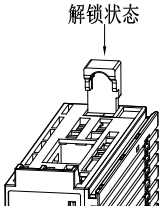

If the DIN rail latch is below, it is locked。

If the DIN rail latch is on top, it is unlocked。

When unlocked, press down on the DIN rail latch to bring it locked。

➢ The tail cover needs to be installed on the last module to prevent the metal PIN from being exposed, and a DIN rail clip is installed at both ends of the main unit or module to prevent the module from sliding left and right, as shown in the figure below。

➢ When installing the guide rail clip, hook the bottom of the guide rail clip to the bottom of the guide rail and turn the guide rail clip to make the guide rail clip

➢ The upper end hooks the upper end of the rail, and finally the fastening screw locks the guide rail snap。

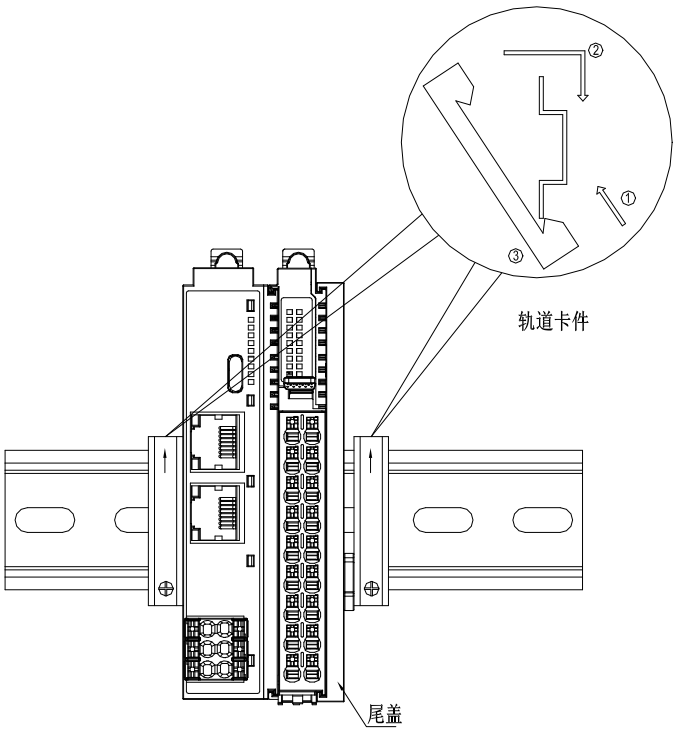

3.6.3 Disassembly method:

➢ Use a flathead screwdriver or similar tool to pry the rail latch upwards, then pull the module away from the DIN rail and press down on the top of the latch when finished

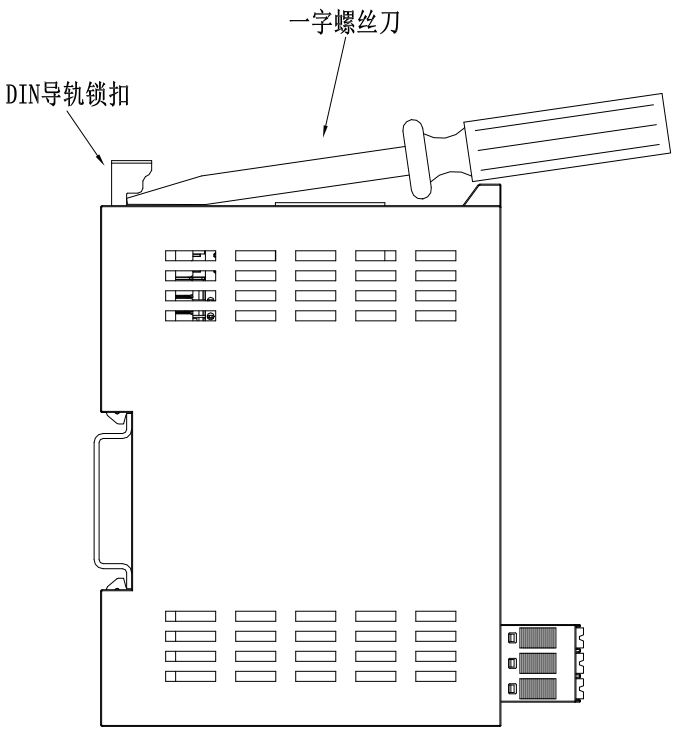

3.6.4 Notes:

- Before installing or disassembling the module, make sure the module is powered off.
- If you encounter a module that is difficult to install, do not use brute force to install it to avoid damaging the current module or other modules. The module should be disassembled from the rail, checked for abnormalities (such as foreign body blockage, etc.), and confirmed that there was no problem before plugging and unplugging.
- When this product is installed on a non-standard DIN rail (DIN rail thickness is 1.0mm), it will cause the DIN rail lock to fail, and the product will not be installed in place, resulting in the product not working normally.

4 Module description:

Installation instructions:

Size description

➢ The mounting dimension information is shown in millimeters (mm) as shown in the figure below.

■ 16-bit module

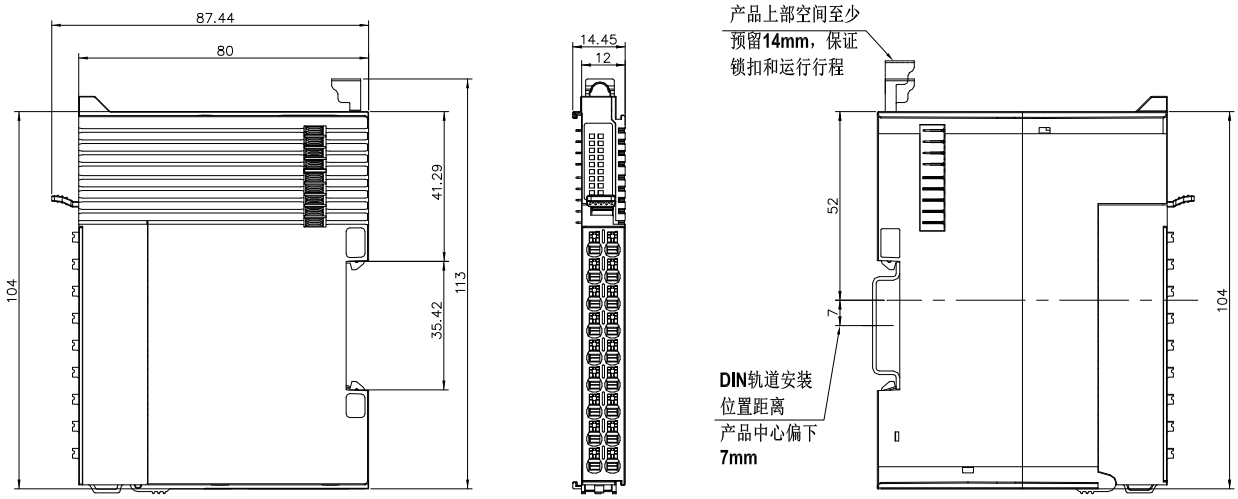

■ 32-bit module

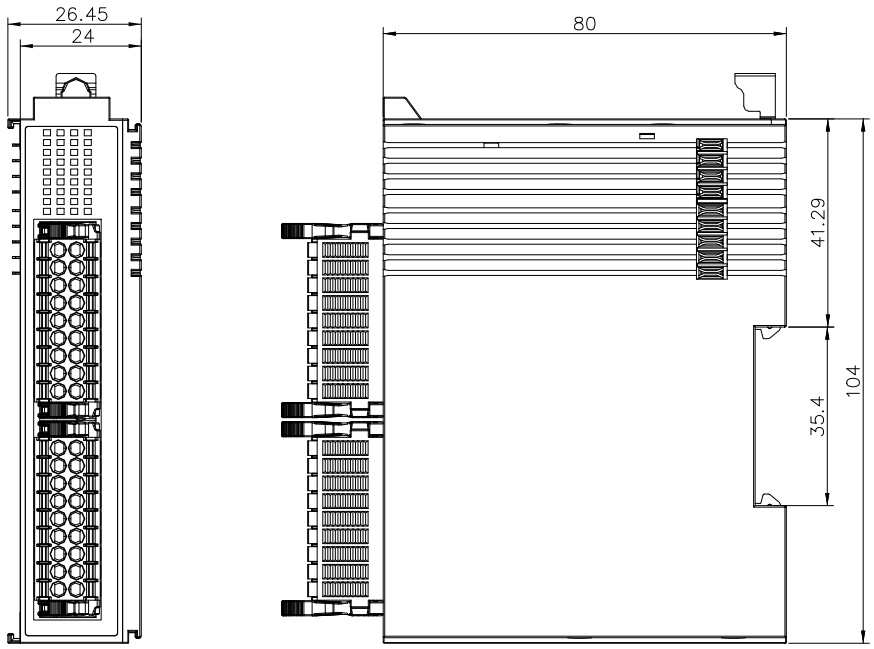

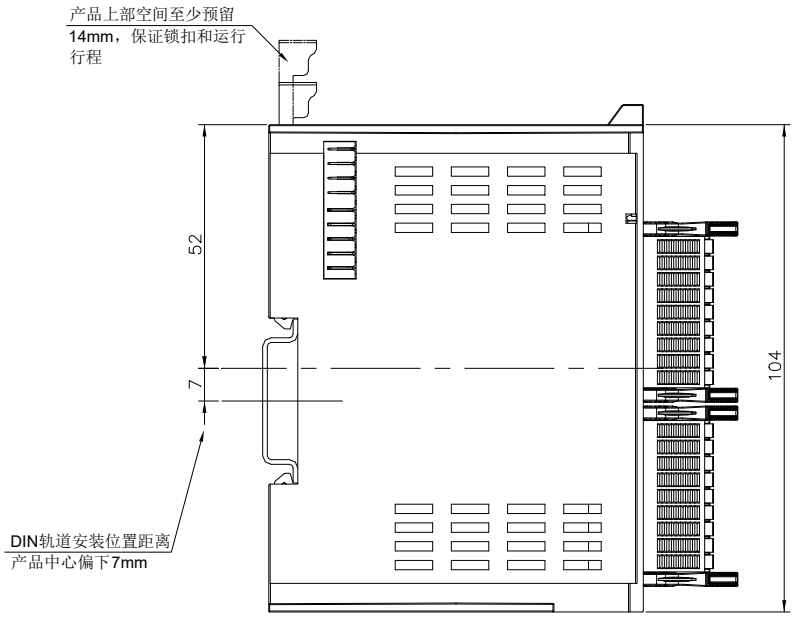

Connect the cables

- 16-bit module

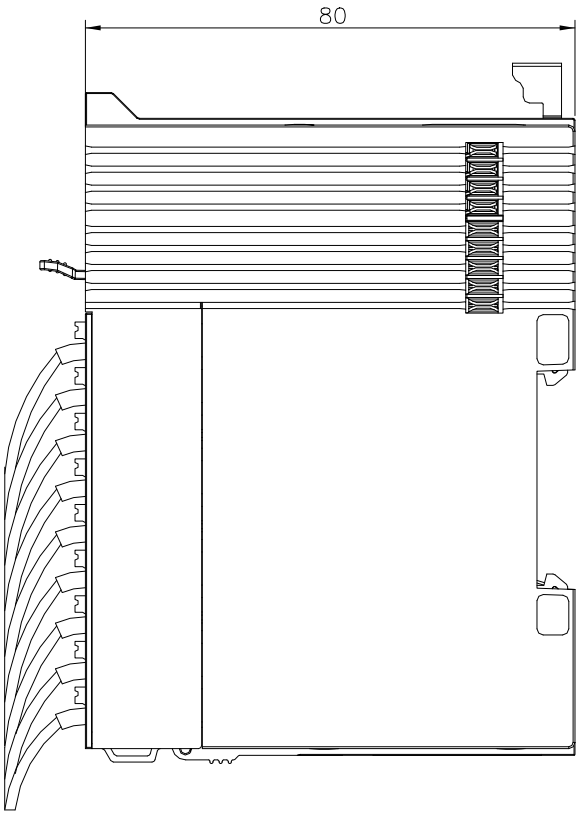

- 32-bit module

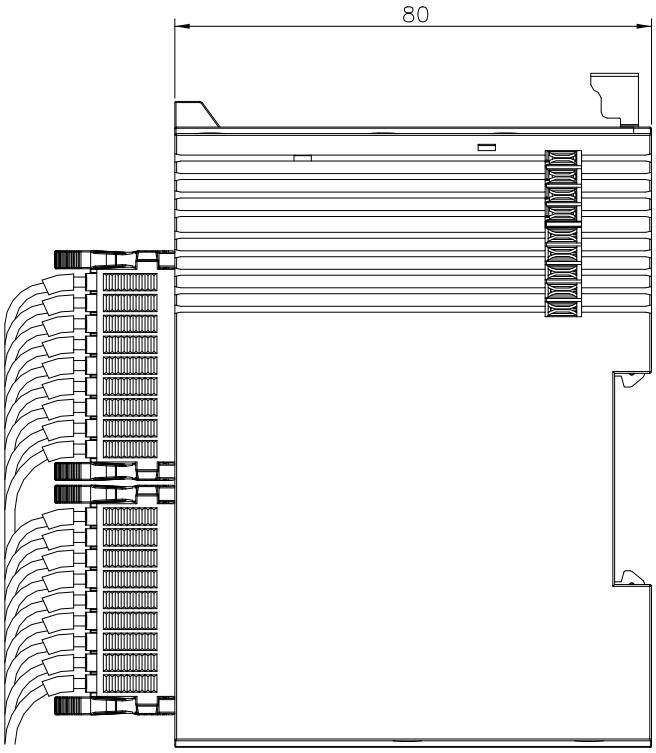

Installation guide

The inter-module assembly is sliding to install via the top and bottom rails of the module, as shown in the figure below。

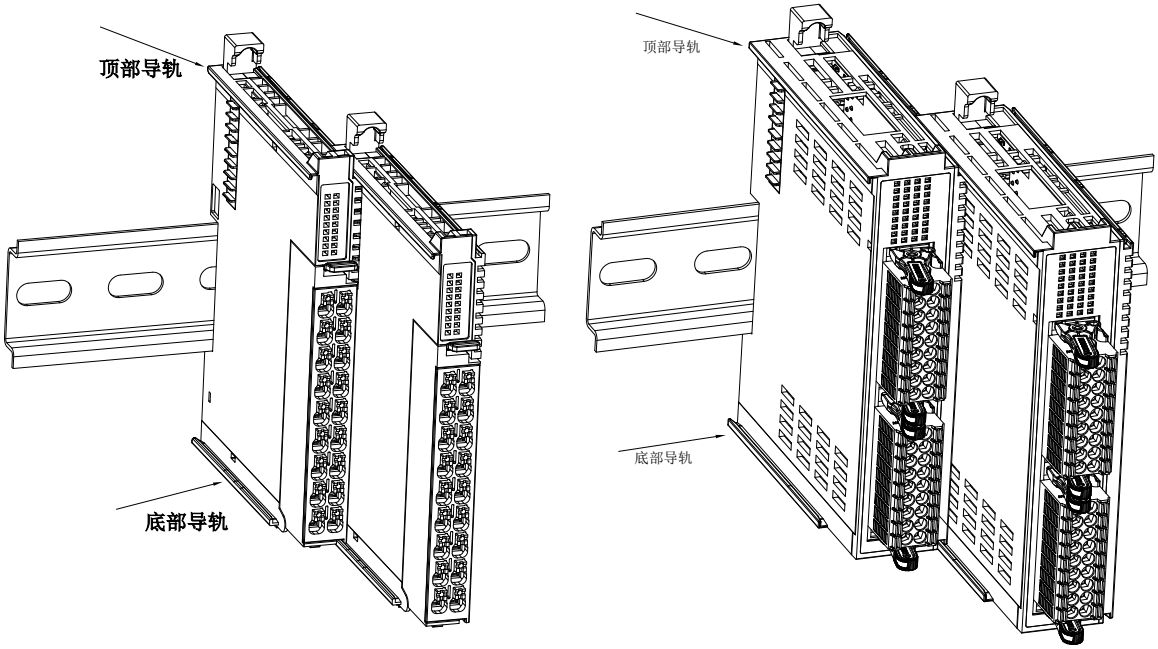

- When installing, align the module with the DIN rail, press the module in the direction

indicated by the arrow, and there will be a noticeable clamping sound after installation, as shown in the figure below.

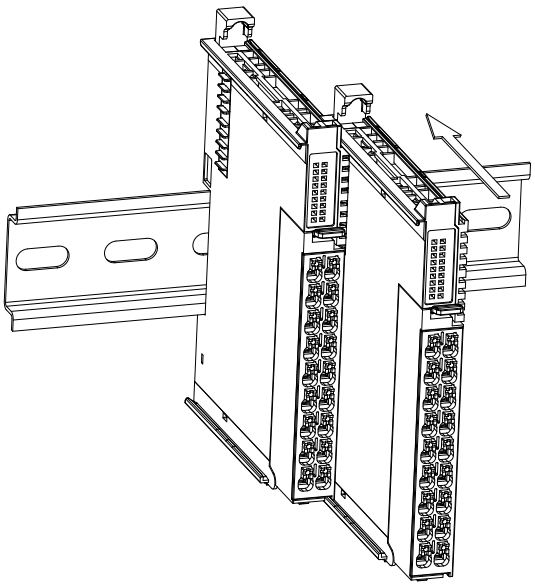

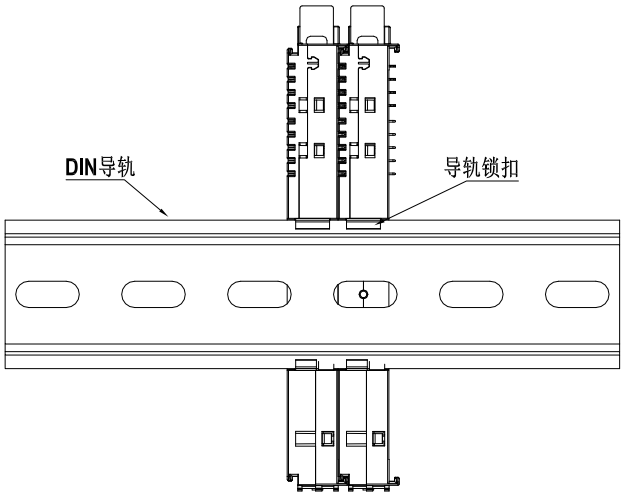

➢ Confirm that the DIN rail lock of the module is locked, and the locking and unlocking status of the rail lock are shown in the figure below.

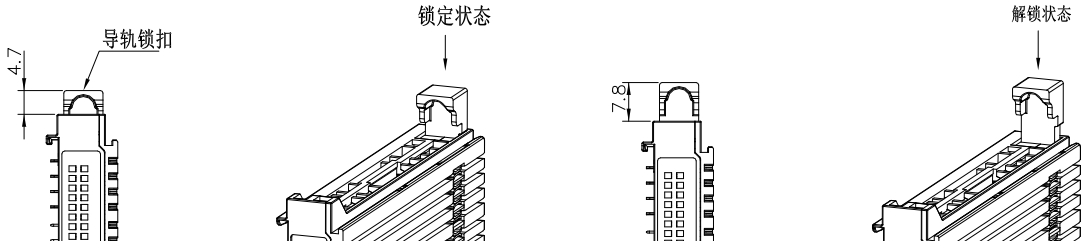

If the DIN rail latch is below, it is locked.

If the DIN rail latch is on top, it is unlocked.

When unlocked, press down on the DIN rail latch to bring it locked.

➢ The tail cover needs to be installed on the last module to prevent the metal PIN from being exposed, and a DIN rail clip is installed at both ends of the main unit or module to prevent the module from sliding left and right, as shown in the figure below.

➢ When installing the guide rail clip, hook the bottom of the guide rail clip to the bottom of the guide rail and turn the guide rail clip so that the upper end of the guide rail clip hooks the upper end of the guide rail, and finally tighten the screw to lock the guide rail clip.

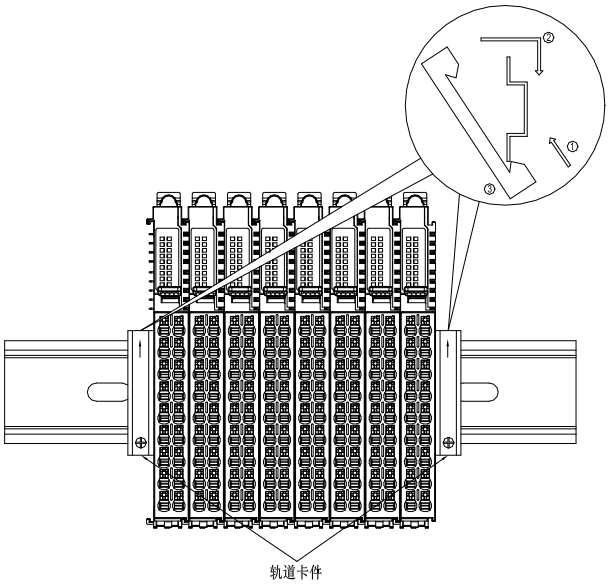

Disassembly method:

Use a flathead screwdriver or similar tool to pry the rail latch upwards, then pull the module away from the DIN rail and press down on the top of the latch when finished

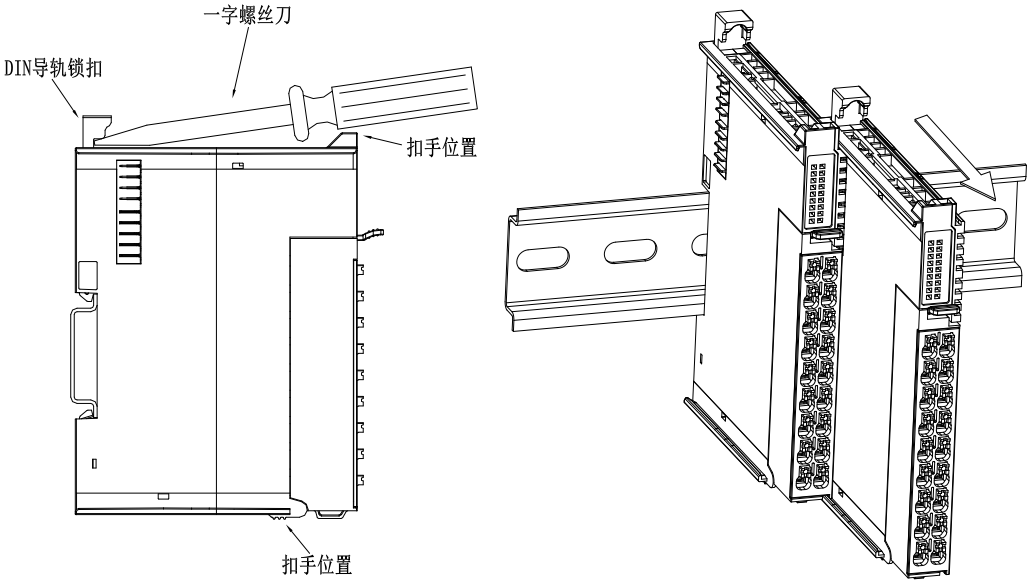

Notes:

- Before installing or disassembling the module, make sure the module is powered off.
- If you encounter a module that is difficult to install, do not use brute force to install it to avoid damaging the current module or other modules. The module should be

disassembled from the rail, checked for abnormalities (such as foreign body blockage, etc.), and confirmed that there was no problem before plugging and unplugging.

- When this product is installed on a non-standard DIN rail (DIN rail thickness is 1.0mm), it will cause the DIN rail lock to fail, and the product will not be installed in place, resulting in the product not working normally.

4.1 DF30-M-16DI-P/N

4.1.1Part description

Light				
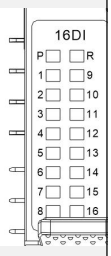	LED No	Status and Meaning	LED No	Status and Meaning
	PWR	Green: The system power supply is normal	RUN	Green: The module is running normally
		Green extinguishing: The system power supply is abnormal		Green extinguishing: module hardware failure, communication failure
				Green flashing: Configuration failure/failsafe mode
	LED1-16	Green Bright: Channel 1-16 input signal is valid.		
		Green off: Channel 1-16 input signal invalid		

Terminal block					
Serial number	Signal	illustrate	Serial number	Signal	illustrate
A1	DI 1	Digital input channel1	B1	DI 9	Digital input channel9
A2	DI 2	Digital input channel2	B2	DI 10	Digital input channel10
A3	DI 3	Digital input channel3	B3	DI 11	Digital input channel11
A4	DI 4	Digital input channel4	B4	DI 12	Digital input channel12
A5	DI 5	Digital input channel5	B5	DI 13	Digital input channel13
A6	DI 6	Digital input channel6	B6	DI 14	Digital input channel14

A7	DI 7	Digital input channel7	B7	DI 15	Digital input channel15
A8	DI 8	Digital input channel8	B8	DI 16	Digital input channel16
A9	COM	Public end pin	B9	COM	Public end pin

4.1.2 Specifications

Structural parameters		
Dimensions (WxHxD)		12mm x 100mm x 80mm
Weight		71.5g
Power Parameters		
The rated voltage of the USYS bus input power supply		5V DC +20%/-15% (4.25V DC~ 6V DC)
The USYS bus input power supply is rated current		<50mA (typical at 5V DC)
UOUT power supply input rated voltage		24 V DC +20%/-15% (20.4V DC~28.8V DC)
UOUT power supply input current rating		<4A (typical at 24V DC)
UOUT power input anti-reverse plug protection		Yes
The module prevents the spread of power failures		Yes
Functional parameters		
Module type		Numeric input
Number of channels		16
Signal type		PNP&NPN
Connection type		1- Wire system
Signal type	"ON" signal voltage	Differential pressure > 11VDC (differential pressure from common input)

	"OFF" signal voltage	Differential pressure < 5VDC (differential pressure from common input)
Input impedance		>7.5kΩ
Hardware response time		100us/100us
Whether to quarantine		Yes
Light status		When the input is in the drive state, the input Light is on (software control)
Software parameters		
Data size		2 Byte
Filter time configuration		Supports single-channel independent configuration
Sync mode		Synchronization within the same coupler group is supported
IO mapping		Support bit-by-bit, byte-by-byte, and word-by-word mapping
Wiring parameters		
Connectivity technology		PUSH-IN type terminal blocks
Connection type		System/field power/input
Crimping area of the wire		0.34～1.5mm
Stripping length		10mm
Installation method:		DIN-35 TYPE RAIL
Material parameters		
Color		Pantone 419C
Shell material		PC PLASTIC
Environmental requirements		
Allowable ambient temperature (during operation)		-20～55℃
Allowable ambient temperature (storage)		-40～85℃
Types of protection		IP20
Contamination level		2. Comply with IEC 61131-2 standard

Working altitude	0～2000m
Relative humidity (non-condensing)	5～95%RH
Anti-vibration	1g, in accordance with IEC 60068-2-6 standard
Impact resistance	15g, in accordance with IEC 60068-2-27
EMC ANTI-INTERFERENCE RATING	Zone B, IEC61131-2
Corrosion resistance	Compliant with IEC 60068-2-42 and IEC 60068-2-43 standards

4.1.3 Wiring diagram

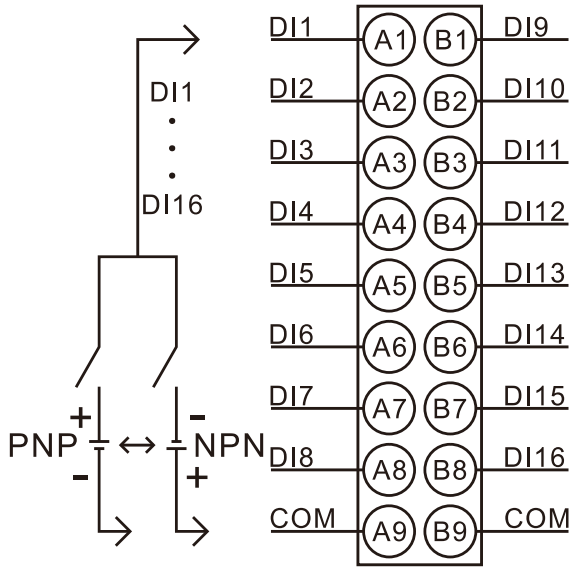

4.2 DF30-M-32DI-P/N

4.2.1Part description

Light

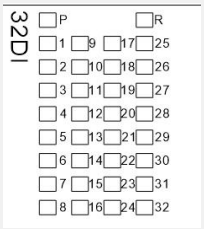

LED No	Status and Meaning	LED No	Status and Meaning
PWR	Green: The system power supply is normal	RUN	Green: The module is running normally
	Green extinguishing: The system power supply is abnormal		Green extinguishing: The system power supply is abnormal
			Green flashing: Configuration failure/failsafe mode
LED1-32	Green Light: Channels 1-32 input signal is valid		
	Green extinguishing: The input signal for channels 1-32 is invalid		

Terminal block

Serial number	Signal	illustrate	Serial number	Signal	illustrate
A1	DI 1	Digital input channel1	B1	DI 9	Digital input channel9
A2	DI 2	Digital input channel2	B2	DI 10	Digital input channel10
A3	DI 3	Digital input channel3	B3	DI 11	Digital input channel11
A4	DI 4	Digital input channel4	B4	DI 12	Digital input channel12
A5	DI 5	Digital input channel5	B5	DI 13	Digital input channel13
A6	DI 6	Digital input channel6	B6	DI 14	Digital input channel14
A7	DI 7	Digital input channel7	B7	DI 15	Digital input channel15
A8	DI 8	Digital input channel8	B8	DI 16	Digital input channel16
A9	COM1	Public end pin1	B9	COM2	Public end pin2
C1	DI 17	Digital input channel17	D1	DI 25	Digital input channel25
C2	DI 18	Digital input channel18	D2	DI 26	Digital input channel26
C3	DI 19	Digital input channel19	D3	DI 27	Digital input channel27
C4	DI 20	Digital input channel20	D4	DI 28	Digital input channel28

C5	DI 21	Digital input channel21	D5	DI 29	Digital input channel29
C6	DI 22	Digital input channel22	D6	DI 30	Digital input channel30
C7	DI 23	Digital input channel23	D7	DI 31	Digital input channel31
C8	DI 24	Digital input channel24	D8	DI 32	Digital input channel32
C9	COM3	Public end pin3	D9	COM4	Public end pin4

4.2.2 Specifications

Structural parameters		
Dimensions (WxHxD)		12mm x 100mm x 80mm
Weight		113.6g
Power Parameters		
The rated voltage of the USYS bus input power supply		5V DC +20%/-15% (4.25V DC~ 6V DC)
The USYS bus input power supply is rated current		<50mA (typical at 5V DC)
UOUT power supply input rated voltage		24 V DC +20%/-15% (20.4V DC~28.8V DC)
UOUT power supply input current rating		4A (typical at 24V DC)
UOUT power input anti-reverse plug protection		Yes
The module prevents the spread of power failures		Yes
Functional parameters		
Module type		Numeric input
Number of channels		32
Signal type		PNP&NPN
Connection type		1- Wire system
Signal type	“ON”	Differential pressure > 11VDC (differential pressure from

	Signal voltage	common input)
	“OFF” Signal voltage	Differential pressure < 5VDC (differential pressure from common input)
Input impedance		>7.5kΩ
Hardware response time		100us/100us
Whether to quarantine		是
Light status		When the input is valid, the input Light is on (software control)
Software parameters		
Data size		4 Byte
Error diagnosis		Communication diagnostics
Filter time configuration		Supports single-channel independent configuration
Sync mode		Synchronization within the same coupler group is supported
IO MAPPING		Support bit-by-bit, byte-by-byte, and word-by-word mapping
Wiring parameters		
Connectivity technology: 通信/现场总线		PROFINET IO: 2 x RJ-45
Connectivity technology		PUSH-IN type terminal blocks
Connection type		System/field power/input
Crimping area of the wire		0.34～1.5mm
Stripping length		10mm
Installation method:		DIN-35 TYPE RAIL
Material parameters		
Color		gy7042
Shell material		PC PLASTIC
Environmental requirements		
Allowable ambient		-20～55℃

temperature (during operation)	
Allowable ambient temperature (storage)	-40～85℃
Types of protection	IP20
Contamination level	2. Comply with IEC 61131-2 standard
Working altitude	0～2000m
Relative humidity (non-condensing)	5～95%RH
Anti-vibration	1g, in accordance with IEC 60068-2-6 standard
Impact resistance	15g, in accordance with IEC 60068-2-27
EMC ANTI-INTERFERENCE RATING	Zone B, IEC61131-2
Corrosion resistance	Compliant with IEC 60068-2-42 and IEC 60068-2-43 standards

4.2.3 Wiring diagram

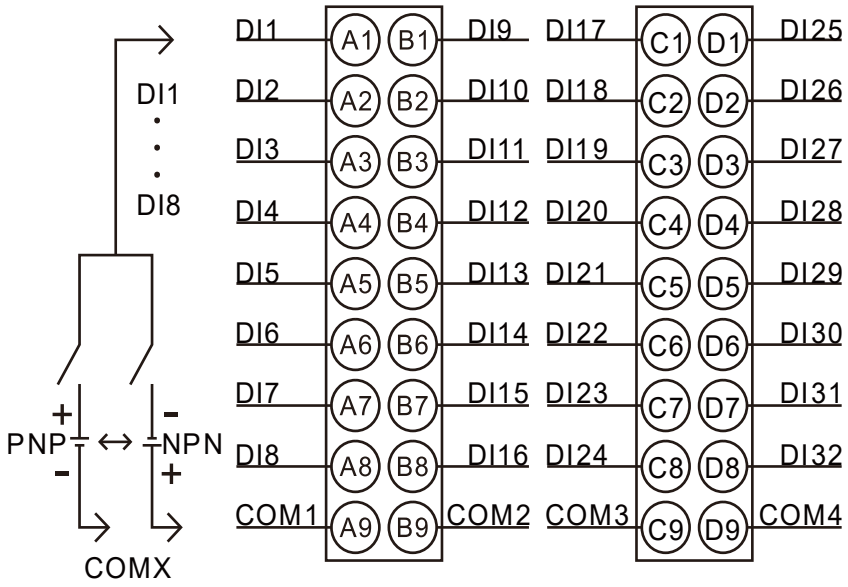

4.3 DF30-M-16DO-N

4.3.1Part description

Light				
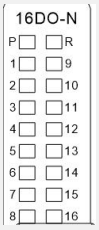	LED No	Status and Meaning	LED No	Status and Meaning
	PWR	Green: The system power supply is normal	RUN	Green: The module is running normally
		Green extinguishing: The system power supply is abnormal		Green extinguishing: The system power supply is abnormal
				Green flashing: Configuration failure/failsafe mode
	LED1-16	Green: Channels 1-16 output signal is valid		
		Green extinguishing: The output signal of channels 1-16 is invalid		

Terminal block					
Serial number	Signal	illustrate	Serial number	Signal	illustrate
A1	DO 1	Digital output channel1	B1	DO 9	Digital output channel9
A2	DO 2	Digital output channel2	B2	DO 10	Digital output channel10
A3	DO 3	Digital output channel3	B3	DO 11	Digital output channel11
A4	DO 4	Digital output channel4	B4	DO 12	Digital output channel12
A5	DO 5	Digital output channel5	B5	DO 13	Digital output channel13
A6	DO 6	Digital output channel6	B6	DO 14	Digital output channel14
A7	DO 7	Digital output channel7	B7	DO 15	Digital output channel15
A8	DO 8	Digital output channel8	B8	DO 16	Digital output channel16
A9	24V	24V power input	B9	0V	0V input

4.3.2 Specifications

Structural parameters		
Dimensions (WxHxD)		12mm x 100mm x 80mm
Weight		71.5g
Power Parameters		
The rated voltage of the USYS bus input power supply		5V DC +20%/-15% (4.25V DC~ 6V DC)
The USYS bus input power supply is rated current		<60mA (typical at 5V DC)
UOUT power supply input rated voltage		24 V DC +20%/-15% (20.4V DC~28.8V DC)
UOUT power supply input current rating		4A (typical at 24V DC)
UOUT power input anti-reverse plug protection		Yes
The module prevents the spread of power failures		Yes
Functional parameters		
Module type		Digital output
Number of channels		16
Signal type		NPN
Connection type		1- Wire system
Power supply input Rated voltage	24V	24V power input
	0V	0V input
NPN Signal type	"ON" Signal voltage	0V DC
	"OFF" Signal	High impedance state, leakage current < 0.1mA

voltage	
Output Load (Resistive Load)	0.5A/point, 4A/module
Output Load (Inductive Load)	7.2W/dot, 24W/module
Output load (light load)	5W/point, 18W/module
Switching frequency	Resistive load 100Hz, inductive load 0.5Hz, lamp load 10Hz
Hardware response time	100us/100us
Output decreasing	Derated by 50% when operating at 55° C (the output current does not exceed 2A when ON) at the same time, or derated by 10° C when the output point is fully ON
Whether to quarantine	Yes
Protection function	Over-temperature shutdown: minimum value 150° C. Typical value 175° C Overcurrent protection: 3A Support short-circuit protection
Light status	When the output is active, the output Light is on (software control)
Software parameters	
Data size	2 Byte
Error diagnosis	Communication diagnostics, power supply diagnostics, channel overcurrent diagnostics
Communication fault output state mode	Maintains current value, outputs to replacement value (configurable)
Overcurrent fault output state mode	Auto Retry, Stop Output (Configurable)
Sync mode	Synchronization within the same coupler group is supported
IO MAPPING	Support bit-by-bit, byte-by-byte, and word-by-word mapping
Wiring parameters	
Connectivity technology	PUSH-IN type terminal blocks
Connection type	System/field power/input

Crimping area of the wire	0.34～1.5mm
Stripping length	10mm
Installation method:	DIN-35 TYPE RAIL
Material parameters	
Color	Pantone 419C
Shell material	PC PLASTIC
Environmental requirements	
Allowable ambient temperature (during operation)	-20～55℃
Allowable ambient temperature (storage)	-40～85℃
Types of protection	IP20
Contamination level	2. Comply with IEC 61131-2 standard
Working altitude	0～2000m
Relative humidity (non-condensing)	5～95%RH
Anti-vibration	1g, in accordance with IEC 60068-2-6 standard
Impact resistance	15g, in accordance with IEC 60068-2-27
EMC ANTI-INTERFERENCE RATING	Zone B, IEC61131-2
Corrosion resistance	Compliant with IEC 60068-2-42 and IEC 60068-2-43 standards

4.3.3 Wiring diagram

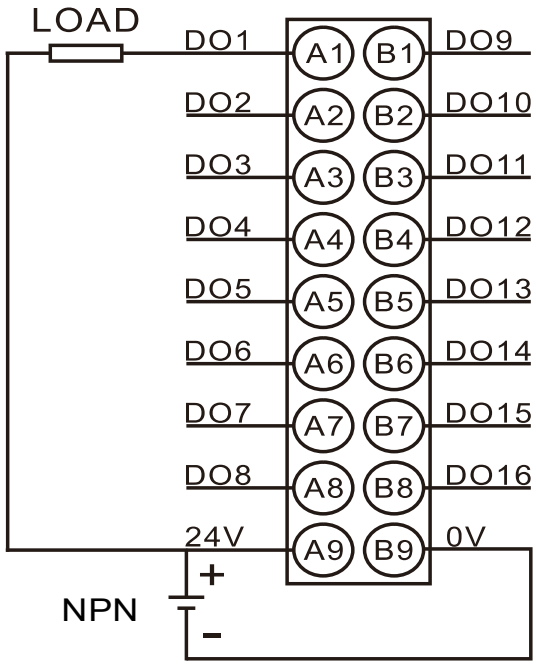

4.4 DF30-M-16DO-P

4.4.1Part description

	LED No	Status and Meaning	LED No	Status and Meaning
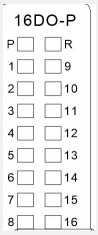	PWR	Green: The system power supply is normal	RUN	Green: The module is running normally
		Green extinguishing: The system power supply is abnormal		Green extinguishing: The system power supply is abnormal
				Green flashing: Configuration failure/failsafe mode
	LED1-16	Green: Channels 1-16 output signal is valid		
		Green extinguishing: The output signal of channels 1-16 is invalid		

Terminal block					
Serial number	Signal	illustrate	Serial number	Signal	illustrate
A1	DO 1	Digital output channel1	B1	DO 9	Digital output channel9

A2	DO 2	Digital output channel2	B2	DO 10	Digital output channel10
A3	DO 3	Digital output channel3	B3	DO 11	Digital output channel11
A4	DO 4	Digital output channel4	B4	DO 12	Digital output channel12
A5	DO 5	Digital output channel5	B5	DO 13	Digital output channel13
A6	DO 6	Digital output channel6	B6	DO 14	Digital output channel14
A7	DO 7	Digital output channel7	B7	DO 15	Digital output channel15
A8	DO 8	Digital output channel8	B8	DO 16	Digital output channel16
A9	24V	24V power input	B9	0V	0V input

4.4.2 Specifications

Structural parameters	
Dimensions (WxHxD)	12mm x 100mm x 80mm
Weight	71.5g
Power Parameters	
The rated voltage of the USYS bus input power supply	5V DC +20%/-15% (4.25V DC~ 6V DC)
The USYS bus input power supply is rated current	<60mA (typical at 5V DC)
UOUT power supply input rated voltage	24 V DC +20%/-15% (20.4V DC~28.8V DC)
UOUT power supply input current rating	4A (typical at 24V DC)
UOUT power input anti-reverse plug protection	Yes
The module prevents the spread of power failures	Yes
Functional parameters	
Module type	Digital output
Number of channels	16
Signal type	PNP

Connection type		1- Wire system
Power supply input Rated voltage	24V	24V power input
	0V	0V input
PNPSignal type	“ON” Signal voltage	24V DC
	“OFF” Signal voltage	High impedance state, leakage current < 0.1mA
Output Load (Resistive Load)		0.5A/point, 4A/module
Output Load (Inductive Load)		7.2W/dot, 24W/module
Output load (light load)		5W/point, 18W/module
Switching frequency		Resistive load 100Hz, inductive load 0.5Hz, lamp load 10Hz
Hardware response time		100us/100us
Output decreasing		Derated by 50% when operating at 55° C (the output current does not exceed 2A when ON) at the same time, or derated by 10° C when the output point is fully ON
Whether to quarantine		Yes
Protection function		Thermal shutdown: 175° C typical Overcurrent protection: 1A Support short-circuit protection
Light status		When the output is active, the output Light is on (software control)
Software parameters		
Data size		2 Byte
Error diagnosis		Communication diagnostics, power supply diagnostics, channel overcurrent diagnostics
Communication fault output		Maintains current value, outputs to replacement value

state mode	(configurable)
Overcurrent fault output state mode	Auto Retry, Stop Output (Configurable)
Sync mode	Synchronization within the same coupler group is supported
IO MAPPING	Support bit-by-bit, byte-by-byte, and word-by-word mapping
Wiring parameters	
Connectivity technology	PUSH-IN type terminal blocks
Connection type	System/field power/input
Crimping area of the wire	0.34～1.5mm
Stripping length	10mm
Installation method:	DIN-35 TYPE RAIL
Material parameters	
Color	Pantone 419C
Shell material	PC PLASTIC
Environmental requirements	
Allowable ambient temperature (during operation)	-20～55℃
Allowable ambient temperature (storage)	-40～85℃
Types of protection	IP20
Contamination level	2. Comply with IEC 61131-2 standard
Working altitude	0～2000m
Relative humidity (non-condensing)	5～95%RH
Anti-vibration	1g, in accordance with IEC 60068-2-6 standard
Impact resistance	15g, in accordance with IEC 60068-2-27
EMC ANTI-INTERFERENCE RATING	Zone B, IEC61131-2

Corrosion resistance	Compliant with IEC 60068-2-42 and IEC 60068-2-43 standards

4.4.3 Wiring diagram

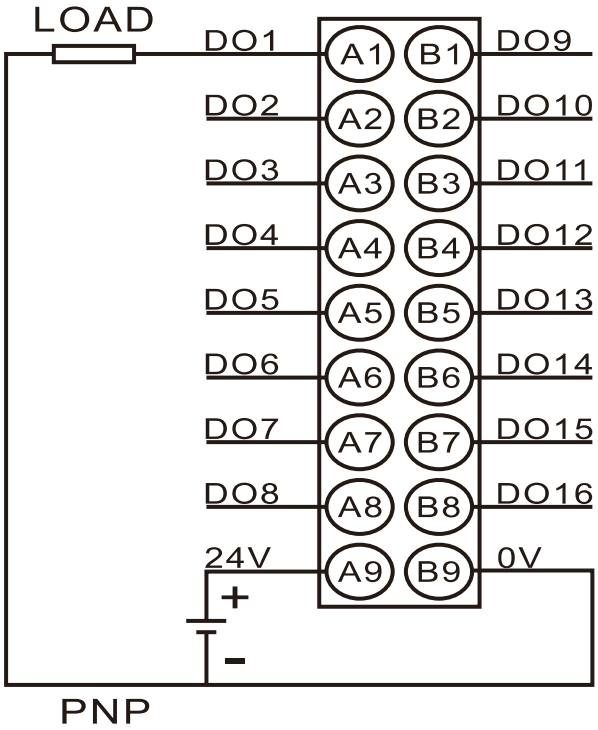

4.5 DF30-M-32DO-P

4.5.1Part description

Light				
	LED No	Status and Meaning	LED No	Status and Meaning
	PWR	Green: The system power supply is normal	RUN	Green: The module is running normally
		Green extinguishing: The system power supply is abnormal		Green extinguishing: The system power supply is abnormal
				Green flashing: Configuration failure/failsafe mode

	LED1-32	Green: Channels 1-32 output signal is valid
		Green extinguishing: The output signal of channels 1-32 is invalid

Terminal block					
Serial number	Signal	illustrate	Serial number	Signal	illustrate
A1	DO 1	Digital output channel1	B1	DO 9	Digital output channel9
A2	DO 2	Digital output channel2	B2	DO 10	Digital output channel10
A3	DO 3	Digital output channel3	B3	DO 11	Digital output channel11
A4	DO 4	Digital output channel4	B4	DO 12	Digital output channel12
A5	DO 5	Digital output channel5	B5	DO 13	Digital output channel13
A6	DO 6	Digital output channel6	B6	DO 14	Digital output channel14
A7	DO 7	Digital output channel7	B7	DO 15	Digital output channel15
A8	DO 8	Digital output channel8	B8	DO 16	Digital output channel16
A9	24V	24V power input	B9	0V	0V input
C1	DO 17	Digital output channel17	D1	DO 25	Digital output channel25
C2	DO 18	Digital output channel18	D2	DO 26	Digital output channel26
C3	DO 19	Digital output channel19	D3	DO 27	Digital output channel27
C4	DO 20	Digital output channel20	D4	DO 28	Digital output channel28
C5	DO 21	Digital output channel21	D5	DO 29	Digital output channel29
C6	DO 22	Digital output channel22	D6	DO 30	Digital output channel30
C7	DO 23	Digital output channel23	D7	DO 31	Digital output channel31
C8	DO 24	Digital output channel24	D8	DO 32	Digital output channel32
C9	24V	24V power input	D9	0V	0V input

4.5.2 Specifications

Structural parameters	
Dimensions (WxHxD)	12mm x 100mm x 80mm
Weight	113.6g
Power Parameters	

The rated voltage of the USYS bus input power supply		5V DC +20%/-15% (4.25V DC~ 6V DC)
The USYS bus input power supply is rated current		<60mA (typical at 5V DC)
UOUT power supply input rated voltage		24 V DC +20%/-15% (20.4V DC~28.8V DC)
UOUT power supply input current rating		4A (typical at 24V DC)
UOUT power input anti-reverse plug protection		Yes
The module prevents the spread of power failures		Yes
Functional parameters		
Module type		Digital output
Number of channels		32
Signal type		PNP
Connection type		1- Wire system
Power supply input Rated voltage	24V	24V power input
	0V	0V input
PNPSignal type	"ON" Signal voltage	24V DC
	"OFF" Signal voltage	High configuration, leakage current < 0.1mA
Output Load (Resistive Load)		0.5A/point, 8A/module
Output Load (Inductive Load)		7.2W/dot, 48W/module
Output load (light load)		5W/dot, 36W/module

Switching frequency	Resistive load 100Hz, inductive load 0.5Hz, lamp load 10Hz
Hardware response time	100us/100us
Output decreasing	Derating by 50% when operating at 55° C (the output current does not exceed 4A when turned on at the same time), or derating by 10° C when the output point is fully ON
Whether to quarantine	是
Protection function	Thermal shutdown: 175° C typical Overcurrent protection: 1A Support short-circuit protection
Light status	When the output is active, the output Light is on (software control)
Software parameters	
Data size	4 Byte
Error diagnosis	Communication diagnostics, power supply diagnostics, channel overcurrent diagnostics
Communication fault output state mode	Keep the current value and output as the replacement value
Overcurrent fault output state mode	Auto Retry, Stop Output (Configurable)
Sync mode	Synchronization within the same coupler group is supported
IO MAPPING	Support bit-by-bit, byte-by-byte, and word-by-word mapping
Wiring parameters	
Connectivity technology: Communications/fieldbuses	PROFINET IO: 2 x RJ-45
Connectivity technology	PUSH-IN type terminal blocks
Connection type	System/field power/input
Crimping area of the wire	0.34～1.5mm
Stripping length	10mm
Installation method:	DIN-35 TYPE RAIL

Material parameters	
Color	gy7042
Shell material	PC PLASTIC
Environmental requirements	
Allowable ambient temperature (during operation)	-20～55℃
Allowable ambient temperature (storage)	-40～85℃
Types of protection	IP20
Contamination level	2. Comply with IEC 61131-2 standard
Working altitude	0～2000m
Relative humidity (non-condensing)	5～95%RH
Anti-vibration	1g, in accordance with IEC 60068-2-6 standard
Impact resistance	15g, in accordance with IEC 60068-2-27
EMC ANTI-INTERFERENCE RATING	Zone B, IEC61131-2
Corrosion resistance	Compliant with IEC 60068-2-42 and IEC 60068-2-43 standards

4.5.3 Wiring diagram

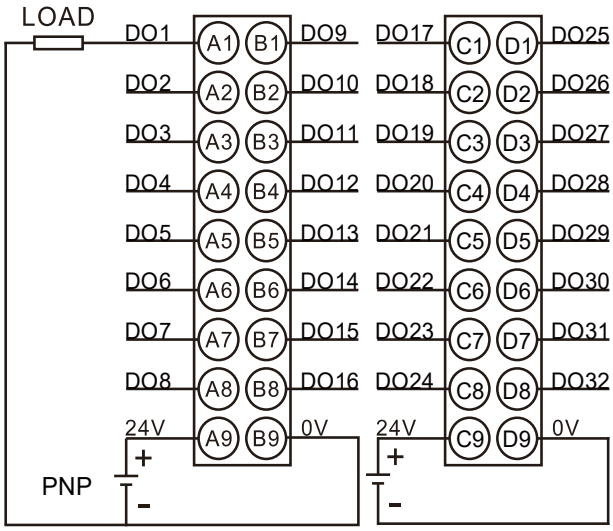

4.6 DF30-M-32DO-N

44.6.1Part description

Light				
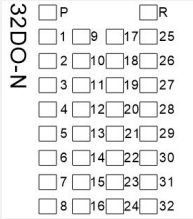	LED No	Status and Meaning	LED No	Status and Meaning
	PWR	Green: The system power supply is normal	RUN	Green: The module is running normally
		Green extinguishing: The system power supply is abnormal		Green extinguishing: The system power supply is abnormal
				Green flashing: Configuration failure/failsafe mode
	LED1-32	Green: Channels 1-32 output signal is valid		
		Green extinguishing: The output signal of channels 1-32 is invalid		

Terminal block					
Serial number	Signal	illustrate	Serial number	Signal	illustrate
A1	DO 1	Digital output channel1	B1	DO 9	Digital output channel9
A2	DO 2	Digital output channel2	B2	DO 10	Digital output channel10
A3	DO 3	Digital output channel3	B3	DO 11	Digital output channel11
A4	DO 4	Digital output channel4	B4	DO 12	Digital output channel12
A5	DO 5	Digital output channel5	B5	DO 13	Digital output channel13
A6	DO 6	Digital output channel6	B6	DO 14	Digital output channel14
A7	DO 7	Digital output channel7	B7	DO 15	Digital output channel15
A8	DO 8	Digital output channel8	B8	DO 16	Digital output channel16
A9	24V	24V power input	B9	0V	0V input
C1	DO 17	Digital output channel17	D1	DO 25	Digital output channel25
C2	DO 18	Digital output channel18	D2	DO 26	Digital output channel26
C3	DO 19	Digital output channel19	D3	DO 27	Digital output channel27

C4	DO 20	Digital output channel20	D4	DO 28	Digital output channel28
C5	DO 21	Digital output channel21	D5	DO 29	Digital output channel29
C6	DO 22	Digital output channel22	D6	DO 30	Digital output channel30
C7	DO 23	Digital output channel23	D7	DO 31	Digital output channel31
C8	DO 24	Digital output channel24	D8	DO 32	Digital output channel32
C9	24V	24V power input	D9	0V	0V input

4.6.2 Specifications

Structural parameters		
Dimensions (WxHxD)		12mm x 100mm x 80mm
Weight		113.6g
Power Parameters		
The rated voltage of the USYS bus input power supply		5V DC +20%/-15% (4.25V DC~ 6V DC)
The USYS bus input power supply is rated current		<60mA (typical at 5V DC)
UOUT power supply input rated voltage		24 V DC +20%/-15% (20.4V DC~28.8V DC)
UOUT power supply input current rating		(typical at 24V DC)
UOUT power input anti-reverse plug protection		Yes
The module prevents the spread of power failures		Yes
Functional parameters		
Module type		Digital output
Number of channels		32
Signal type		NPN
Connection type		1- Wire system
Power supply	24V	24V power input

input Rated voltage	0V	0V input
NPNSignal type	“ON” Signal voltage	24V DC
	“OFF” Signal voltage	High configuration, leakage current < 0.1mA
Output Load (Resistive Load)		0.5A/point, 8A/module
Output Load (Inductive Load)		7.2A/point, 48W/module
Output load (light load)		5W/dot, 36W/module
Switching frequency		Resistive load 100Hz, inductive load 0.5Hz, lamp load 10Hz
Hardware response time		100us/100us
Output decreasing		Derating by 50% when operating at 55° C (the output current does not exceed 4A when turned on at the same time), or derating by 10° C when the output point is fully ON
Whether to quarantine		Yes
Protection function		Over-temperature shutdown: minimum value 150° C. Typical value 175° C Overcurrent protection: 3A Support short-circuit protection
Light status		When the output is active, the output Light is on (software control)
Software parameters		
Data size		4 Byte
Error diagnosis		Communication diagnostics, power supply diagnostics, channel overcurrent diagnostics
Communication fault output state mode		Keep the current value and output as the replacement value

Overcurrent fault output state mode	Automatic retries
Sync mode	Synchronization within the same coupler group is supported
IO MAPPING	Support bit-by-bit, byte-by-byte, and word-by-word mapping
Wiring parameters	
Connectivity technology: Communications/fieldbuses	PROFINET IO: 2 x RJ-45
Connectivity technology	PUSH-IN type terminal blocks
Connection type	System/field power/input
Crimping area of the wire	0.34～1.5mm
Stripping length	10mm
Installation method:	DIN-35 TYPE RAIL
Material parameters	
Color	gy7042
Shell material	PC PLASTIC
Environmental requirements	
Allowable ambient temperature (during operation)	-20～55℃
Allowable ambient temperature (storage)	-40～85℃
Types of protection	IP20
Contamination level	2. Comply with IEC 61131-2 standard
Working altitude	0～2000m
Relative humidity (non-condensing)	5～95%RH
Anti-vibration	1g, in accordance with IEC 60068-2-6 standard
Impact resistance	15g, in accordance with IEC 60068-2-27

EMC ANTI-INTERFERENCE RATING	Zone B, IEC61131-2
Corrosion resistance	Compliant with IEC 60068-2-42 and IEC 60068-2-43 standards

4.6.3 Wiring diagram

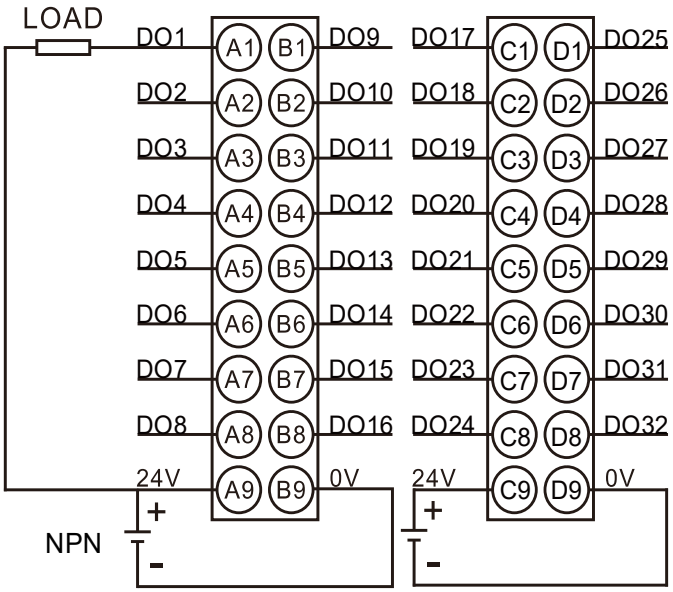

4.7 DF30-M-4AI-UI

4.7.1Part description

Light				
	LED No	Status and Meaning	LED No	Status and Meaning
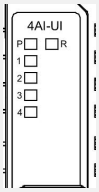	PWR	Green: The system power supply is normal	RUN	Green: The module is running normally
		Green extinguishing: The system power supply is abnormal		Green extinguishing: The system power supply is abnormal
				Green flashing: Configuration failure/failsafe mode
	LED1-4	Green: Channels 1-4 input Signal is valid		
		Green extinguished: Channels 1-4 input signal is invalid		

		Green flashing: When the diagnostic switch for channels 1-4 is turned on, the corresponding input channel fault is affected

Terminal block					
Serial number	Signal	illustrate	Serial number	Signal	illustrate
A1	U1+	Analog voltage input channel1	B1	U1-	Analog voltage input channel1
A2	U2+	Analog voltage input channel2	B2	U2-	Analog voltage input channel2
A3	U3+	Analog voltage input channel3	B3	U3-	Analog voltage input channel3
A4	U4+	Analog voltage input channel4	B4	U4-	Analog voltage input channel4
A5	I1+	Analog current input channel1	B5	I1-	Analog current input channel1
A6	I2+	Analog current input channel2	B6	I2-	Analog current input channel2
A7	I3+	Analog current input channel3	B7	I3-	Analog current input channel3
A8	I4+	Analog current input channel4	B8	I4-	Analog current input channel4
A9	24V	24V power output	B9	0V	0V output

4.7.2 Specifications

Structural parameters	
Dimensions (WxHxD)	12mm x 100mm x 80mm
Weight	71.5g
Power Parameters	
The rated voltage of the USYS bus input power supply	5V DC +20%/-15% (4.25V DC~ 6V DC)

The USYS bus input power supply is rated current	<50mA
UIN power supply input rated voltage	24 V DC (20.4V DC~28.8V DC)
UIN power supply input current rating	<50mA non-distribution
	< 250mA power distribution
UIN power input anti-reverse plug protection	Yes
Functional parameters	
Module type	Analog voltage and current input module
Number of channels	4
Signal type	Voltage/current
Connection type	2-wire power distribution, 4-wire non-power distribution
Channel mode configuration	Disable, 0~10mA、0~20mA、4~20mA、±10V、0~10V、2~10V、±5V、0~5V、1~5V
Voltage input accuracy	± 0.1% (± 10V full scale).
voltageInput impedance	＞400KΩ
Voltage input limit	±15V
Voltage input diagnostics	Over-limit detection, 2~10V, 1~5V support disconnection detection
Current sampling impedance	≤250Ω
Current input accuracy	± 0.1% (20mA full scale).
Current input limit	30mA
Current input diagnostics	Over-limit detection, 4~20mA supports disconnection detection
Whether to quarantine	The interface channels are not isolated, and the interface is isolated from the bus
Input action display	When the input signal is active, the input channel light is solid (software control)

Software parameters	
Sampling period	1ms (4 channels)
Filtering method	Sliding window filtering, debounce filtering, 50HZ/60HZ anti-power frequency
Data size	8 Byte
Error diagnosis	Communication diagnosis, power supply diagnosis, channel overrun diagnosis, channel disconnection diagnosis
IO MAPPING	Word-by-word mapping is supported
Wiring parameters	
Connectivity technology	PUSH-IN type terminal blocks
Connection type	System/field power/input
Crimping area of the wire	0.34～1.5mm
Stripping length	10mm
Installation method:	DIN-35 TYPE RAIL
Material parameters	
Color	Pantone 419C
Shell material	PC PLASTIC
Environmental requirements	
Allowable ambient temperature (during operation)	-20～55℃
Allowable ambient temperature (storage)	-40～85℃
Types of protection	IP20
Contamination level	2. Comply with IEC 61131-2 standard
Working altitude	0～2000m
Relative humidity (non-condensing)	5～95%RH
Anti-vibration	1g, in accordance with IEC 60068-2-6 standard

Impact resistance	15g, in accordance with IEC 60068-2-27
EMC ANTI-INTERFERENCE RATING	Zone B, IEC61131-2
Corrosion resistance	Compliant with IEC 60068-2-42 and IEC 60068-2-43 standards

4.7.3 Wiring diagram

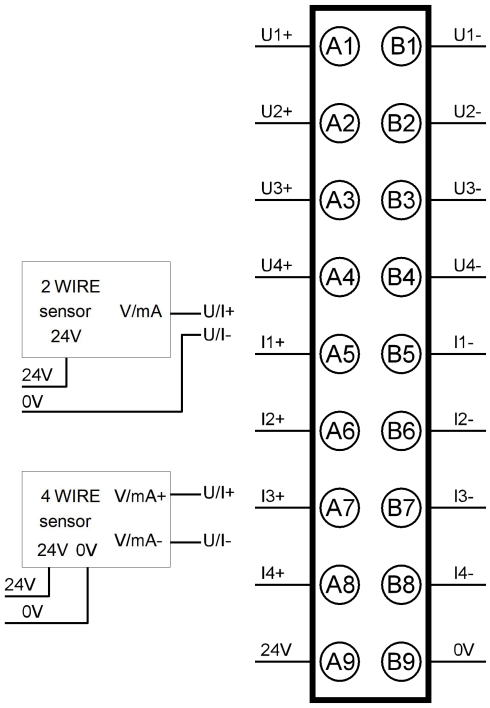

Concentrate:

- If the sensor enumeration item in channel 1 is configured as 0~10mA ~ 4~20mA, then channel 1 is the current detection mode, and the sensor is connected to the A5 ~ B5 channel; If the sensor enumeration item in channel 1 is configured as -10V~+10V ~ 1V~5V, then channel 1 is in voltage detection mode, and the sensor is connected to channel A1 ~ B1;
- If the sensor enumeration in channel 2 is configured as 0~10mA ~ 4~20mA, channel 2 is the current detection mode, and the sensor is connected to the A6 ~ B6 channel; If the sensor enumeration on channel 2 is configured as -10V~+10V ~ 1V~5V, then channel 2 is in voltage detection mode, the sensor is connected to channel A2 ~ B2, and so on for other channels.

4.8 DF30-M-4AO-UI

4.8.1Part description

Light				
	LED No	Status and Meaning	LED No	Status and Meaning
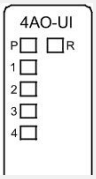	PWR	Green: The system power supply is normal	RUN	Green: The module is running normally
		Green extinguishing: The system power supply is abnormal		Green extinguishing: The system power supply is abnormal
				Green flashing: Configuration failure/failsafe mode
	LED1-4	Green: Channel 1-4 output signal is valid		
		Green extinguishing: The output signal of channels 1-4 is invalid		

Terminal block					
Serial number	Signal	illustrate	Serial number	Signal	illustrate
A1	U1+	Analog voltage output channel1	B1	U1-	Analog voltage output channel1
A2	U2+	Analog voltage output channel2	B2	U2-	Analog voltage output channel2
A3	U3+	Analog voltage output channel3	B3	U3-	Analog voltage output channel3
A4	U4+	Analog voltage output channel4	B4	U4-	Analog voltage output channel4
A5	I1+	Analog current output channel1	B5	I1-	Analog current output channel1
A6	I2+	Analog current output channel2	B6	I2-	Analog current output channel2
A7	I3+	Analog current output channel3	B7	I3-	Analog current output channel3

A8	I4+	Analog current output channel4	B8	I4-	Analog current output channel4
A9	24V	24V power input	B9	0V	0V input

4.8.2 Specifications

Structural parameters	
Dimensions (WxHxD)	12mm x 100mm x 80mm
Weight	71.5g
Power Parameters	
The rated voltage of the USYS bus input power supply	5V DC +20%/-15% (4.25V DC~ 6V DC)
The USYS bus input power supply is rated current	<50mA (typical at 5V DC)
UOUT power supply input rated voltage	24 V DC +20%/-15% (20.4V DC~28.8V DC)
UOUT power supply input current rating	＜200mA
UOUT power input anti-reverse plug protection	Yes
Functional parameters	
Module type	Analog voltage current output
Number of channels	4
Signal type	Voltage/current
Connection type	2-wire power distribution, 4-wire non-power distribution
Voltage output range	±10V、0~10V、2~10V、±5V、0~5V、1~5V
Voltage output load	＞1kΩ
Voltage output accuracy	±0.1%
Current output range	0~10mA、0~20mA、4~20mA
current output load	0~10mA: <1.5kΩ

	other: <600Ω
Current output accuracy	±0.1%
Whether to quarantine	The interface channels are not isolated, the power supply is isolated from the interface, and the interface is isolated from the bus
Output action display	When the output is active, the output Light is on (software control)
Software parameters	
Convert the range of digital quantities	-20000~20000, -32000~32000, -27648~27648
IO process data size	16byte
Error diagnosis	Communication diagnostics, power supply diagnostics, output open circuits (effective when current is output)
Sync mode	Synchronization within the same coupler group is supported
IO MAPPING	Word-by-word mapping is supported
Wiring parameters	
Connectivity technology	PUSH-IN type terminal blocks
Connection type	System/field power/input
Crimping area of the wire	0.34～1.5mm
Stripping length	10mm
Installation method:	DIN-35 TYPE RAIL
Material parameters	
Color	Pantone 419C
Shell material	PC PLASTIC
Environmental requirements	
Allowable ambient temperature (during operation)	-20～55℃
Allowable ambient	-40～85℃

temperature (storage)	
Types of protection	IP20
Contamination level	2. Comply with IEC 61131-2 standard
Working altitude	0～2000m
Relative humidity (non-condensing)	5～95%RH
Anti-vibration	1g, in accordance with IEC 60068-2-6 standard
Impact resistance	15g, in accordance with IEC 60068-2-27
EMC ANTI-INTERFERENCE RATING	Zone B, IEC61131-2
Corrosion resistance	Compliant with IEC 60068-2-42 and IEC 60068-2-43 standards

4.8.3 Wiring diagram

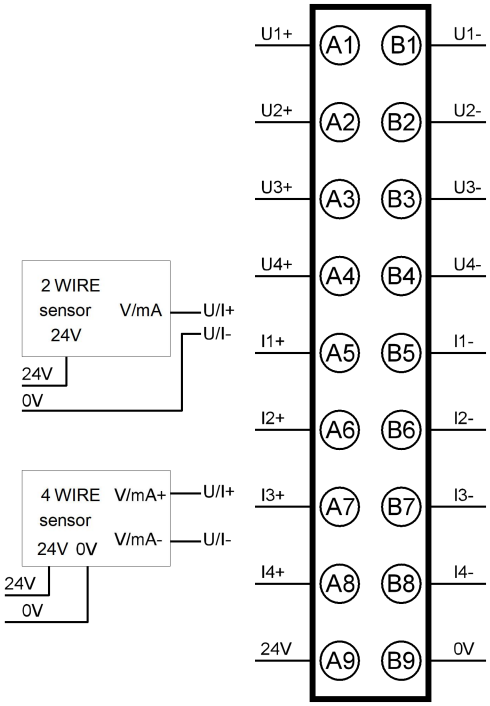

4.9 DF30-M-8AI-I

4.9.1Part description

Light				
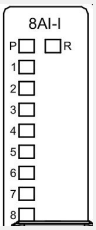	LED No	Status and Meaning	LED No	Status and Meaning
	PWR	Green: The system power supply is normal	RUN	Green: The module is running normally
		Green extinguishing: The system power supply is abnormal		Green extinguishing: The system power supply is abnormal
				Green flashing: Configuration failure/failsafe mode
	LED1-8	Green light: Channels 1-8 input Signal is valid		
		Green extinguishing: Channels 1-8 input signal is invalid		
		Green flashing: When the diagnostic switch on channels 1-8 is on, the corresponding input channel is faulty		

Terminal block					
Serial number	Signal	illustrate	Serial number	Signal	illustrate
A1	I1+	Current input channel1	B1	I1-	Current input channel1
A2	I2+	Current input channel2	B2	I2-	Current input channel2
A3	I3+	Current input channel3	B3	I3-	Current input channel3
A4	I4+	Current input channel4	B4	I4-	Current input channel4
A5	I5+	Current input channel5	B5	I5-	Current input channel5
A6	I6+	Current input channel6	B6	I6-	Current input channel6
A7	I7+	Current input channel7	B7	I7-	Current input channel7
A8	I8+	Current input channel8	B8	I8-	Current input channel8
A9	24V	24V power output	B9	0V	0V output

4.9.2 Specifications

Structural parameters	
Dimensions (WxHxD)	12mm x 100mm x 80mm
Weight	71.5g
Power Parameters	
The rated voltage of the USYS bus input power supply	5V DC +20%/-15% (4.25V DC~ 6V DC)
The USYS bus input power supply is rated current	<50mA
UIN power supply input rated voltage	24 V DC (20.4V DC~28.8V DC)
UIN power supply input current rating	<50mA non-distribution
	< 250mA power distribution
UIN power input anti-reverse plug protection	Yes
The module prevents the spread of power failures	Yes
Functional parameters	
Module type	Analog input module
Number of channels	8
Signal type	current
Connection type	2-wire power distribution, 4-wire non-power distribution
Maximum input range of current	0~10mA: 0~12.5mA 0~20mA: 0~24mA 4~20mA: 1.19~24mA
Current harvesting impedance	≤250Ω
Current input accuracy	±0.1% (full scale)
Drift	±50ppm/K
Current protection	30mA

Current input diagnostics	Over-limit detection, 4~20mA supports disconnection detection
Whether to quarantine	The interface channels are not isolated, the power supply is isolated from the interface, and the interface is isolated from the bus
Independent channel enable configuration	Yes
Diagnose and report feature configurations	Yes
Channel mode configuration	Disable, 0~10mA, 0~20mA, 4~20mA
Input action display	When the input Signal is valid, the input Light is solid
Channel reverse polarity protection	Yes
The channel is anti-24V misconnected	Yes
Software parameters	
Sampling period	1.6ms (8 channels)
Filtering method	Sliding window filtering, debounce filtering, 50HZ/60HZ anti-power frequency
Data size	16 Byte
Error diagnosis	Communication diagnosis, power supply diagnosis, channel overrun diagnosis, channel disconnection diagnosis
IO MAPPING	Word-by-word mapping is supported
Wiring parameters	
Connectivity technology	PUSH-IN type terminal blocks
Connection type	System/field power/input
Crimping area of the wire	0.34～1.5mm
Stripping length	10mm
Installation method:	DIN-35 TYPE RAIL

Material parameters	
Color	Pantone 419C
Shell material	PC PLASTIC
Environmental requirements	
Allowable ambient temperature (during operation)	-20～55℃
Allowable ambient temperature (storage)	-40～85℃
Types of protection	IP20
Contamination level	2. Comply with IEC 61131-2 standard
Working altitude	0～2000m
Relative humidity (non-condensing)	5～95%RH
Anti-vibration	1g, in accordance with IEC 60068-2-6 standard
Impact resistance	15g, in accordance with IEC 60068-2-27
EMC ANTI-INTERFERENCE RATING	Zone B, IEC61131-2
Corrosion resistance	Compliant with IEC 60068-2-42 and IEC 60068-2-43 standards

4.9.3 Wiring diagram

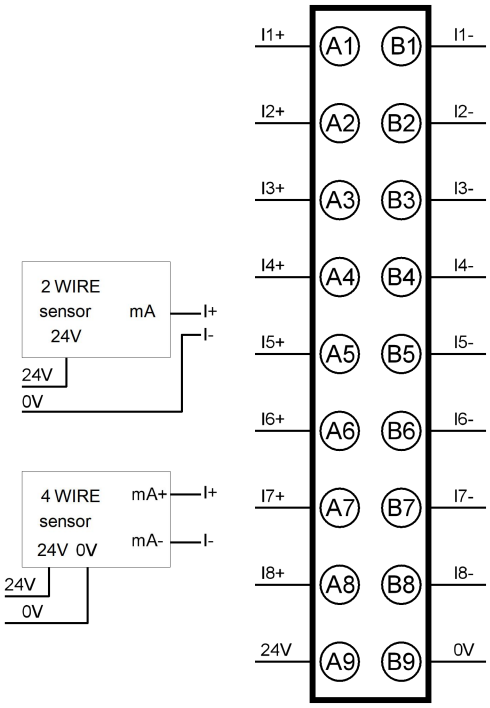

4.10 DF30-M-8AO-I

4.10.1Part description

Light				
	LED No	Status and Meaning	LED No	Status and Meaning
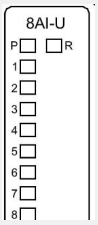	PWR	Green: The system power supply is normal	RUN	Green: The module is running normally
		Green extinguishing: The system power supply is abnormal		Green extinguishing: The system power supply is abnormal
				Green flashing: Configuration failure/failsafe mode
	LED1-8	Green: Channels 1-8 output signal is valid		
		Green extinguishing: Channels 1-8 output signal abnormal		

Terminal block					
Serial number	Signal	illustrate	Serial number	Signal	illustrate

A1	I1+	Current output channel1	B1	I1-	Current output channel1
A2	I2+	Current output channel2	B2	I2-	Current output channel2
A3	I3+	Current output channel3	B3	I3-	Current output channel3
A4	I4+	Current output channel4	B4	I4-	Current output channel4
A5	I5+	Current output channel5	B5	I5-	Current output channel5
A6	I6+	Current output channel6	B6	I6-	Current output channel6
A7	I7+	Current output channel7	B7	I7-	Current output channel7
A8	I8+	Current output channel8	B8	I8-	Current output channel8
A9	24V	24V power input	B9	0V	0V input

4.10.2 Specifications

Structural parameters	
Dimensions (WxHxD)	12mm x 100mm x 80mm
Weight	71.5g
Power Parameters	
The rated voltage of the USYS bus input power supply	5V DC +20%/-15% (4.25V DC~ 6V DC)
The USYS bus input power supply is rated current	<50mA (typical at 5V DC)
UOUT power supply input rated voltage	24 V DC +20%/-15% (20.4V DC~28.8V DC)
UOUT power supply input current rating	＜200mA
UOUT power input anti-reverse plug protection	Yes
Functional parameters	
Module type	Analog output
Number of channels	8
Signal type	current

Current output range	0~10ma: 0~12.5ma 0~20ma: 0~24ma 4~20ma: 1.19~24ma
Current output load	0~10ma: <1.5kΩ other: <600Ω
Current output accuracy	±0.1% (Full scale)
Channel mode configuration	Disable, 0~10ma, 0~20ma, 4~20ma
Whether to quarantine	The interface channel is not isolated, the interface is isolated from the bus, 500VAC
Drift	±50ppm/k
Output response time	10%~90% Step jump: <100ms
Diagnostic tests	Communication diagnosis, power supply diagnosis, output open circuit
Output status configuration after shutdown	Keep the current output or output preset
Stop mode	Press the faildown state mode and no longer refresh
Output action display	When the output signal is active, the Light is solid
Software parameters	
Convert the range of digital quantities	0~20000, 0~32000, 0~27648
IO 过程 Data size	16byte
Error diagnosis	Communication diagnosis, power supply diagnosis, output open circuit
Sync mode	Synchronization within the same coupler group is supported
IO MAPPING	Word-by-word mapping is supported
Wiring parameters	
Connectivity technology	PUSH-IN type terminal blocks
Connection type	System/field power/input
Crimping area of the wire	0.34～1.5mm

Stripping length	10mm
Installation method:	DIN-35 TYPE RAIL
Material parameters	
Color	Pantone 419C
Shell material	PC PLASTIC
Environmental requirements	
Allowable ambient temperature (during operation)	-20～55℃
Allowable ambient temperature (storage)	-40～85℃
Types of protection	IP20
Contamination level	2. Comply with IEC 61131-2 standard
Working altitude	0～2000m
Relative humidity (non-condensing)	5～95%RH
Anti-vibration	1g, in accordance with IEC 60068-2-6 standard
Impact resistance	15g, in accordance with IEC 60068-2-27
EMC ANTI-INTERFERENCE RATING	Zone B, IEC61131-2
Corrosion resistance	Compliant with IEC 60068-2-42 and IEC 60068-2-43 standards

4.10.3 Wiring diagram

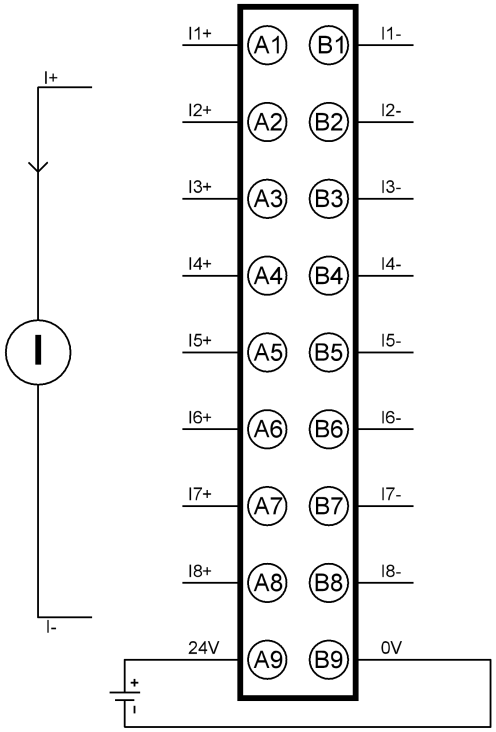

4.11 DF30-M-8AI-U

4.11.1Part description

Light				
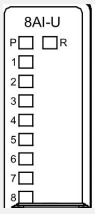	LED No	Status and Meaning	LED No	Status and Meaning
	PWR	Green: The system power supply is normal	RUN	Green: The module is running normally
		Green extinguishing: The system power supply is abnormal		Green extinguishing: The system power supply is abnormal
				Green flashing: Configuration failure/failsafe mode
	LED1-8	Green light: Channels 1-8 input Signal is valid		
		Green extinguishing: Channels 1-8 input signal is invalid		
		Green flashing: When the input diagnostic switch on channels 1-8 is turned on, the corresponding channel input fault		
Terminal block				

Serial number	Signal	illustrate	Serial number	Signal	illustrate
A1	U1+	Voltage input channel1	B1	U1-	Voltage input channel1
A2	U2+	Voltage input channel2	B2	U2-	Voltage input channel2
A3	U3+	Voltage input channel3	B3	U3-	Voltage input channel3
A4	U4+	Voltage input channel4	B4	U4-	Voltage input channel4
A5	U5+	Voltage input channel5	B5	U5-	Voltage input channel5
A6	U6+	Voltage input channel6	B6	U6-	Voltage input channel6
A7	U7+	Voltage input channel7	B7	U7-	Voltage input channel7
A8	U8+	Voltage input channel8	B8	U8-	Voltage input channel8
A9	24V	24V power output	B9	0V	0V output

4.11.2 Specifications

Structural parameters	
Dimensions (WxHxD)	12mm x 100mm x 80mm
Weight	71.5g
Power Parameters	
The rated voltage of the USYS bus input power supply	5V DC +20%/-15% (4.25V DC~ 6V DC)
The USYS bus input power supply is rated current	<50m
UIN power supply input rated voltage	24 V DC (20.4V DC~28.8V DC)
UIN power supply input current rating	<50mA non-distribution
	<250mA power distribution
UIN power input anti-reverse plug protection	Yes
The module prevents the spread of power failures	Yes
Functional parameters	

Module type	Analog input module
Number of channels	8
Signal type	voltage
Connection type	2-wire power distribution, 4-wire non-power distribution
Voltage input range	±10V、0~10V、2~10V、±5V、0~5V、1~5V
Input impedance	＞400KΩ
Voltage input accuracy	±0.1%(Full scale)
Drift	±50ppm/K
Voltage protection	24V
Voltage input diagnostics	2~10V, 1~5V support disconnection detection
Whether to quarantine	The interface channels are not isolated, and the interface is isolated from the bus
Independent channel enable configuration	Yes
Diagnose and report feature configurations	Yes
Channel mode configuration	Disable、±10V、0~10V、2~10V、±5V、0~5V、1~5V
Input action display	When the input Signal is valid, the input Light is solid
The channel is anti-24V misconnected	Yes
Software parameters	
Sampling period	1.6ms (8 channels)
Filtering method	Sliding window filtering, dejitter filtering, 50HZ\60HZ anti-power frequency
Data size	16 Byte
Error diagnosis	Communication diagnosis, power supply diagnosis, channel overrun diagnosis, channel disconnection diagnosis
IO MAPPING	Word-by-word mapping is supported
Wiring parameters	

Connectivity technology	PUSH-IN type terminal blocks
Connection type	System/field power/input
Crimping area of the wire	0.34～1.5mm
Stripping length	10mm
Installation method:	DIN-35 TYPE RAIL
Material parameters	
Color	Pantone 419C
Shell material	PC PLASTIC
Environmental requirements	
Allowable ambient temperature (during operation)	-20～55℃
Allowable ambient temperature (storage)	-40～85℃
Types of protection	IP20
Contamination level	2. Comply with IEC 61131-2 standard
Working altitude	0～2000m
Relative humidity (non-condensing)	5～95%RH
Anti-vibration	1g, in accordance with IEC 60068-2-6 standard
Impact resistance	15g, in accordance with IEC 60068-2-27
EMC ANTI-INTERFERENCE RATING	Zone B, IEC61131-2
Corrosion resistance	Compliant with IEC 60068-2-42 and IEC 60068-2-43 standards

4.11.3 Wiring diagram

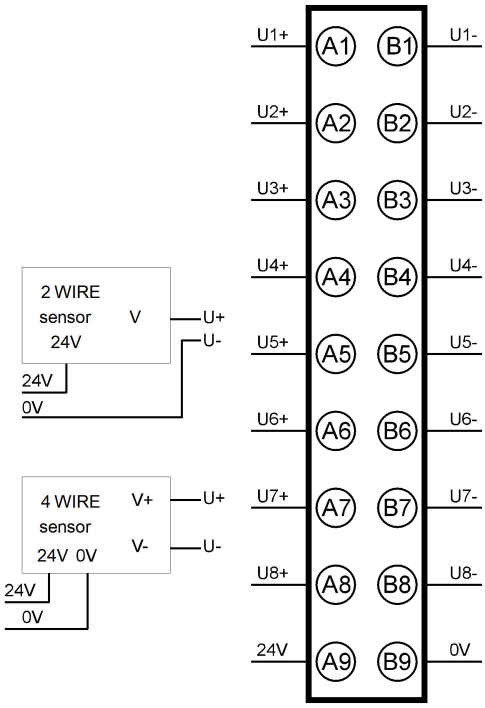

4.12 DF30-M-8AO-U

4.12.1Part description

Light				
	LED No	Status and Meaning	LED No	Status and Meaning
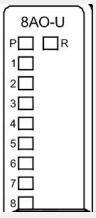	PWR	Green: The system power supply is normal	RUN	Green: The module is running normally
		Green extinguishing: The system power supply is abnormal		Green extinguishing: The system power supply is abnormal
				Green flashing: Configuration failure/failsafe mode
	LED1-8	Green: Channels 1-8 output signal is valid		
		Green extinguishing: The output signal of channels 1-8 is invalid		

Terminal block					
Serial number	Signal	illustrate	Serial number	Signal	illustrate

A1	U1+	Voltage output channel1	B1	U1-	Voltage output channel1
A2	U2+	Voltage output channel2	B2	U2-	Voltage output channel2
A3	U3+	Voltage output channel3	B3	U3-	Voltage output channel3
A4	U4+	Voltage output channel4	B4	U4-	Voltage output channel4
A5	U5+	Voltage output channel5	B5	U5-	Voltage output channel5
A6	U6+	Voltage output channel6	B6	U6-	Voltage output channel6
A7	U7+	Voltage output channel7	B7	U7-	Voltage output channel7
A8	U8+	Voltage output channel8	B8	U8-	Voltage output channel8
A9	24V	24V power input	B9	0V	0V input

4.12.2 Specifications

Structural parameters	
Dimensions (WxHxD)	12mm x 100mm x 80mm
Weight	71.5g
Power Parameters	
The rated voltage of the USYS bus input power supply	5V DC +20%/-15% (4.25V DC~ 6V DC)
The USYS bus input power supply is rated current	<50mA (typical at 5V DC)
UOUT power supply input rated voltage	24 V DC +20%/-15% (20.4V DC~28.8V DC)
UOUT power supply input current rating	＜200mA
UOUT power input anti-reverse plug protection	Yes
Functional parameters	
Module type	Analog output
Number of channels	8
Signal type	voltage

Voltage output range	±10V、0~10V、2~10V、±5V、0~5V、1~5V
Voltage output load	＞1kΩ
Voltage output accuracy	±0.1% (Full scale)
Whether to quarantine	The interface channel is not isolated, the interface is isolated from the bus, 500VAC
Drift	±50ppm/k
Diagnose and report feature configurations	Yes
Diagnostic tests	Communication diagnostics, power diagnostics
Channel mode settings	Disable、±10V、0~10V、2~10V、±5V、0~5V、1~5V
Output status configuration after shutdown	Keep the current output or output preset
Stop mode	Press the faildown state mode and no longer refresh
Output action display	When the output is valid, the output Light is on
Software parameters	
Convert the range of digital quantities	-20000~20000, -32000~32000, -27648~27648
IO process data size	16byte
Error diagnosis	Communication diagnostics, power diagnostics
Sync mode	Synchronization within the same coupler group is supported
IO MAPPING	Word-by-word mapping is supported
Wiring parameters	
Connectivity technology	PUSH-IN type terminal blocks
Connection type	System/field power/input
Crimping area of the wire	0.34～1.5mm
Stripping length	10mm
Installation method:	DIN-35 TYPE RAIL
Material parameters	
Color	Pantone 419C

Shell material	PC PLASTIC
Environmental requirements	
Allowable ambient temperature (during operation)	-20～55℃
Allowable ambient temperature (storage)	-40～85℃
Types of protection	IP20
Contamination level	2. Comply with IEC 61131-2 standard
Working altitude	0～2000m
Relative humidity (non-condensing)	5～95%RH
Anti-vibration	1g, in accordance with IEC 60068-2-6 standard
Impact resistance	15g, in accordance with IEC 60068-2-27
EMC ANTI-INTERFERENCE RATING	Zone B, IEC61131-2
Corrosion resistance	Compliant with IEC 60068-2-42 and IEC 60068-2-43 standards

4.12.3 Wiring diagram

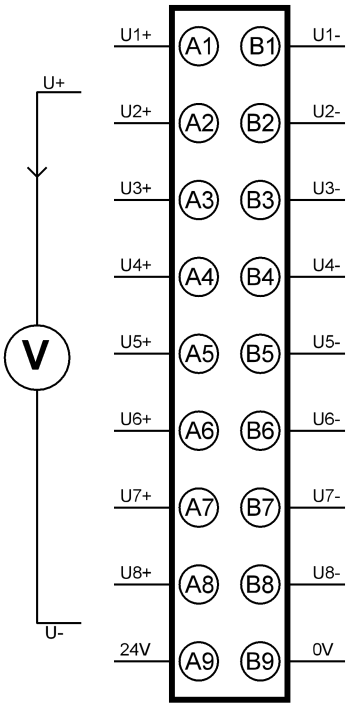

4.13 DF30-M-4RTD/TC

4.13.1Part description

Light				
	LED No	Status and Meaning	LED No	Status and Meaning
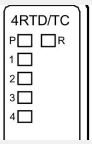	PWR	Green: The system power supply is normal	RUN	Green: The module is running normally
		Green extinguishing: The system power supply is abnormal		Green extinguishing: The system power supply is abnormal
				Green flashing: Configuration failure/failsafe mode
	LED1-4	Green: Channels 1-4 input Signal is valid		
		Green extinguished: Channels 1-4 input signal is invalid		
		Green flashing: When the diagnostic switch for channels 1-4 is turned on, the corresponding channel input fault		

Terminal block					
Serial number	Signal	illustrate	Serial number	Signal	illustrate
A1	RTD1+	The first channel Signal input	B1	RTD1-	The first channel Signal input
A2	Sense1+(TC+)	The first channel Signal input	B2	Sense1-(TC-)	The first channel Signal input
A3	RTD2+	Second channel Signal input	B3	RTD2-	Second channel Signal input
A4	Sense2+(TC+)	Second channel Signal input	B4	Sense2-(TC-)	Second channel Signal input
A5	RTD3+	Third channel Signal input	B5	RTD3-	Third channel Signal input
A6	Sense3+(TC+)	Third channel Signal input	B6	Sense3-(TC-)	Third channel Signal input
A7	RTD4+	Fourth channel Signal input	B7	RTD4-	Fourth channel Signal input
A8	Sense4+(TC+)	Fourth channel Signal input	B8	Sense4-(TC-)	Fourth channel Signal input
A9	/	Reserve suspension	B9	/	Reserve suspension

4.13.2 Specifications

Structural parameters	
Dimensions (WxHxD)	12mm x 100mm x 80mm
Weight	71.5g
Power Parameters	
The rated voltage of the USYS bus input power supply	5V DC +20%/-15% (4.25V DC~ 6V DC)
The USYS bus input power supply is rated current	<60mA (typical values at 5V DC)
Functional parameters	

Module type	Thermoresistance thermocouple measurement module
Number of channels	4
Sensor type	Pt100, Pt200, Pt500, Pt1000, Ni100, Ni120, Ni200, Ni500, Ni1000, Cu10,Cu50,Cu53,Cu100, KTY83-110, KTY83-120, KTY83-121, KTY83-122, KTY83-150, KTY83-151, KTY84-130,KTY84-150,KTY84-151,40 Ω,300 Ω, 500 Ω, 1 kΩ, 2 kΩ, K,E,T,J,B,S,R,N,C,L, ±15.625mV ,±31.25mV , ±62.5mV, ±125mV,±250mV,±500mV,±1000mV, ±2000mV
Connection	2-wire system, 3-wire system, 4-wire system
Input accuracy (25° C)	Full scale* (±0.1%)
Drift	±50ppm/K, ±0.375%
Connection method	Two-wire/three-wire/four-wire system
Whether to quarantine	The interface is isolated from the bus, between the terminal and the power supply, and not between the channels
Channel diagnostics	Over-limit alarm, over-limit alarm, disconnection alarm, overflow error
Diagnose and report feature configurations	Yes
Input action display	When the input signal is valid, the channel input light is solid, and when the channel diagnosis is enabled, the channel input light flashes when the input signal is invalid
Software parameters	
Sampling period	RTD:250ms/TC:500ms、RTD:500ms/TC:1000ms、RTD:1000ms/TC:2000ms、RTD:320ms/TC:640ms(50Hz frequency suppression)、RTD:266ms/TC:532ms(60Hz frequency suppression)
Filtering method	Sliding window filtering, dejitter filtering, 50HZ\60HZ anti-power frequency
Frequency interference	Yes50Hz | 60Hz restrain

suppression	
Data size	8 Byte
Error diagnosis	Communication diagnosis, power supply diagnosis, channel overrun diagnosis, channel disconnection diagnosis
IO MAPPING	Word-by-word mapping is supported
Wiring parameters	
Connectivity technology	PUSH-IN type terminal blocks
Connection type	System/field power/input
Crimping area of the wire	0.34～1.5mm
Stripping length	10mm
Installation method:	DIN-35 TYPE RAIL
Material parameters	
Color	Pantone 419C
Shell material	PC PLASTIC
Environmental requirements	
Allowable ambient temperature (during operation)	-20～55℃
Allowable ambient temperature (storage)	-40～85℃
Types of protection	IP20
Contamination level	2. Comply with IEC 61131-2 standard
Working altitude	0～2000m
Relative humidity (non-condensing)	5～95%RH
Anti-vibration	1g, in accordance with IEC 60068-2-6 standard
Impact resistance	15g, in accordance with IEC 60068-2-27
EMC ANTI-INTERFERENCE RATING	Zone B, IEC61131-2

Corrosion resistance	Compliant with IEC 60068-2-42 and IEC 60068-2-43 standards

4.13.3 Wiring diagram

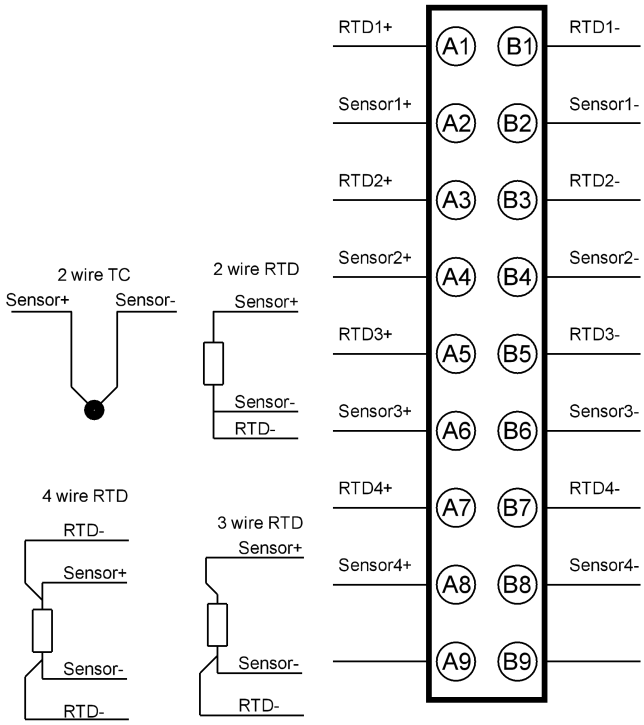

4.14 DF30-M-8TC

4.14.1Part description

Light				
	LED No	Status and Meaning	LED No	Status and Meaning
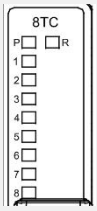	PWR	Green: The system power supply is normal	RUN	Green: The module is running normally
		Green extinguishing: The system power supply is abnormal		Green extinguishing: The system power supply is abnormal
				Green flashing: Configuration failure/failsafe mode
	LED1-8	Green light: Channels 1-8 input Signal is valid		
		Green extinguishing: Channels 1-8 input signal is invalid		
		Green flashing: When the input diagnostic switch on channels 1-8 is		

		turned on, the corresponding channel input fault			
Terminal block					
Serial number	Signal	illustrate	Serial number	Signal	illustrate
A1	TC1+	Thermocouple input channel1	B1	TC1-	Thermocouple input channel1
A2	TC2+	Thermocouple input channel2	B2	TC2-	Thermocouple input channel2
A3	TC3+	Thermocouple input channel3	B3	TC3-	Thermocouple input channel3
A4	TC4+	Thermocouple input channel4	B4	TC4-	Thermocouple input channel4
A5	TC5+	Thermocouple input channel5	B5	TC5-	Thermocouple input channel5
A6	TC6+	Thermocouple input channel6	B6	TC6-	Thermocouple input channel6
A7	TC7+	Thermocouple input channel7	B7	TC7-	Thermocouple input channel7
A8	TC8+	Thermocouple input channel8	B8	TC8-	Thermocouple input channel8
A9	\	\	B9	\	\

4.14.2 Specifications

Structural parameters	
Dimensions (WxHxD)	12mm x 100mm x 80mm
Weight	71.5g
Power Parameters	
The rated voltage of the USYS bus input power supply	5V DC +20%/-15% (4.25V DC~ 6V DC)
The USYS bus input power	<60mA

supply is rated current	
Functional parameters	
Module type	Analog input
Number of channels	8
Signal type	thermocouple
Connection type	2-wire system
Display sensitivity	0.1℃
Input terminals	Thermocouple input, thermocouple type: K、E、T、J、B、S、R、N、C、L、±15.625mV、±31.25mV、±62.5mV、±125mV、±250mV、±500mV、±1000mV、±2000mV
Compensation method	Internal cold end compensation
Accuracy (normal temperature 25° C)	Thermocouple measurement: (±0.1%) (± 125mV full scale) + cold end compensation error Voltage Measurement: (±0.1%) (±2000mV Full Scale)
Accuracy (Operating Temperature -20° C~55° C)	Thermocouple measurement: (±0.3%) (±125mV full scale) + cold end compensation error Voltage measurement: (±0.3%) (±2000mV full scale)
Whether to quarantine	The interface is isolated from the bus, between the terminal and the power supply, and not between the channels
Input action display	When the output is active, the output Light is on (software control)
Software parameters	
Sampling period	500ms、1000ms、2000ms、1280ms(50Hz frequency suppression)、1064ms(60Hz frequency suppression)
Filtering method	Sliding window filtering, dejitter filtering, 50HZ\60HZ anti-power frequency
Data size	16 Byte
Error diagnosis	Communication diagnosis, power supply diagnosis, channel overrun diagnosis, channel disconnection diagnosis

IO MAPPING	Word-by-word mapping is supported
Wiring parameters	
Connectivity technology	PUSH-IN type terminal blocks
Connection type	System/field power/input
Crimping area of the wire	0.34～1.5mm
Stripping length	10mm
Installation method:	DIN-35 TYPE RAIL
Material parameters	
Color	Pantone 419C
Shell material	PC PLASTIC
Environmental requirements	
Allowable ambient temperature (during operation)	-20～55℃
Allowable ambient temperature (storage)	-40～85℃
Types of protection	IP20
Contamination level	2. Comply with IEC 61131-2 standard
Working altitude	0～2000m
Relative humidity (non-condensing)	5～95%RH
Anti-vibration	1g, in accordance with IEC 60068-2-6 standard
Impact resistance	15g, in accordance with IEC 60068-2-27
EMC ANTI-INTERFERENCE RATING	Zone B, IEC61131-2
Corrosion resistance	Compliant with IEC 60068-2-42 and IEC 60068-2-43 standards

4.14.3 Wiring diagram

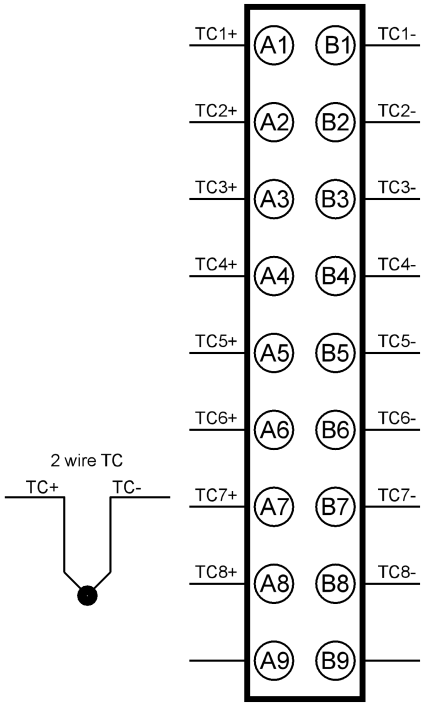

4.15 DF30-M-2CNT

4.15.1Part description

Light				
	LED No	Status and Meaning	LED No	Status and Meaning
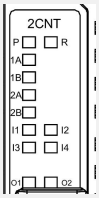	PWR	Green: The system power supply is normal	RUN	Green: The module is running normally
		Green extinguishing: The system power supply is abnormal		Green extinguishing: The system power supply is abnormal
				Green flashing: Configuration failure/failsafe mode
	1A/1B/2A /2B	Green Light: 1A/1B/2A/2B differential signal input indicates, input is the driving state		
		Green extinguishing: 1A/1B/2A/2B differential signal input indication, the input is not in the driving state		

	DI1/DI2/ DI3/DI4	Green Bright: DI1/DI2/DI3/DI4 Digital input channel indicator, input is the drive status.
		Green off: DI1/DI2/DI3/DI4 Digital input channel indicator, input is not in driving state.
	DO1/DO2	Green Light: DO1/DO2 Digital output channel indication, output is in driving state.
		Green Light: DO1/DO2 Digital output channel indication, output is in driving state.

Terminal block					
Serial number	Signal	illustrate	Serial number	Signal	illustrate
A1	5V	The 5V power supply outputs the positive electrode	B1	AGND	5V power supply output negative electrode
A2	1A+	Channel 1A is a differential input Signal+	B2	1A-	Channel 1A Phase-Differential Input Signal-
A3	1B+	Channel 1B phase-differential input Signal+	B3	1B-	Channel 1B is a phase-differential input signal-
A4	2A+	Channel 2A is a differential input Signal+	B4	2A-	Channel 2A Phase Difference Input Signal-
A5	2B+	Channel 2B is a phase-differential input Signal+	B5	2B-	Channel 2B Phase-Differential Input Signal-
A6	DI 1	Digital input channel1	B6	DI 2	Digital input channel2
A7	DI 3	Digital input channel3	B7	DI 4	Digital input channel4
A8	COM	Public end	B8	PE	ground

A9	DO 1	Digital output channel1	B9	DO 2	Digital output channel2

4.15.2 Specifications

Structural parameters	
Dimensions (WxHxD)	12mm x 100mm x 80mm
Weight	71.5g
Power Parameters	
The rated voltage of the USYS bus input power supply	5V DC +20%/-15% (4.25V DC~ 6V DC)
The USYS bus input power supply is rated current	<50mA (Typical at 5V DC)
The terminal output power supply is rated voltage	5V DC
The module prevents the spread of power failures	Yes
Functional parameters	
Differential counting input specifications	
Module type	Counter inputs (single-phase pulse plus directional, A-phase, B-phase, AB-phase, SSI)
Input method	Differential input
Number of channels	2
Differential input voltage level	RS422 level (logic 0<200 mA; Logic 1 >200 mA)
Highest input frequency	4Mhz
Count range	32 位
Frequency measurement range	0.04HZ~4Mhz
Counting accuracy	100ppm
Whether to quarantine	Yes
Input action display	When the input is in the drive state, the input Light is on (hardware control)

Single-ended input specifications	
Input type	Numeric input
Input method	Single-ended input, NPN/PNP
Enter the channel	4 (Counting channels are 2 channels, AB phase per channel)
Frequency measurement range	0.04Hz~500kHz
Input voltage level	24V DC (20.4V DC~28.8V DC)
Input Current (Typical)	50 mA (24V typical)
ON voltage	>15V DC
OFF voltage	<5V DC
Whether to quarantine	Yes
Input action display	When input is in the drive state, input Light (hardware control)
Output specifications	
Output type	Digital output
Output method	NPN
Output channel	2
Output voltage level	24V DC (20.4V DC ~28.8V DC)
Output Load (Resistive Load)	0.5A/point, 1A/module
Output Load (Inductive Load)	7.2W/点，1A/模块
Output load (light load)	10W/模块 5W/point, 10W/module
Output action display	When the output is in the drive state, the input Light is on (hardware control)
Software parameters	
Data size	72 Byte
Error diagnosis	Communication diagnosis and configuration parameter diagnosis
Communication Fault Count status mode	Keep the current count value, clear the count value, and continue counting
Communication fault output	Turn off the output, enable the output, and keep the current

state mode	output
IO MAPPING	Support bit-by-bit, byte-by-byte, and word-by-word mapping
Wiring parameters	
Connectivity technology	PUSH-IN type terminal blocks
Connection type	System/field power/input
Crimping area of the wire	0.34～1.5mm
Stripping length	10mm
Installation method:	DIN-35 TYPE RAIL
Material parameters	
Color	Pantone 419C
Shell material	PC PLASTIC
Environmental requirements	
Allowable ambient temperature (during operation)	-20～55℃
Allowable ambient temperature (storage)	-40～85℃
Types of protection	IP20
Contamination level	2. Comply with IEC 61131-2 standard
Working altitude	0～2000m
Relative humidity (non-condensing)	5～95%RH
Anti-vibration	1g, in accordance with IEC 60068-2-6 standard
Impact resistance	15g, in accordance with IEC 60068-2-27
EMC ANTI-INTERFERENCE RATING	Zone B, IEC61131-2
Corrosion resistance	Compliant with IEC 60068-2-42 and IEC 60068-2-43 standards

4.15.3 Wiring diagram

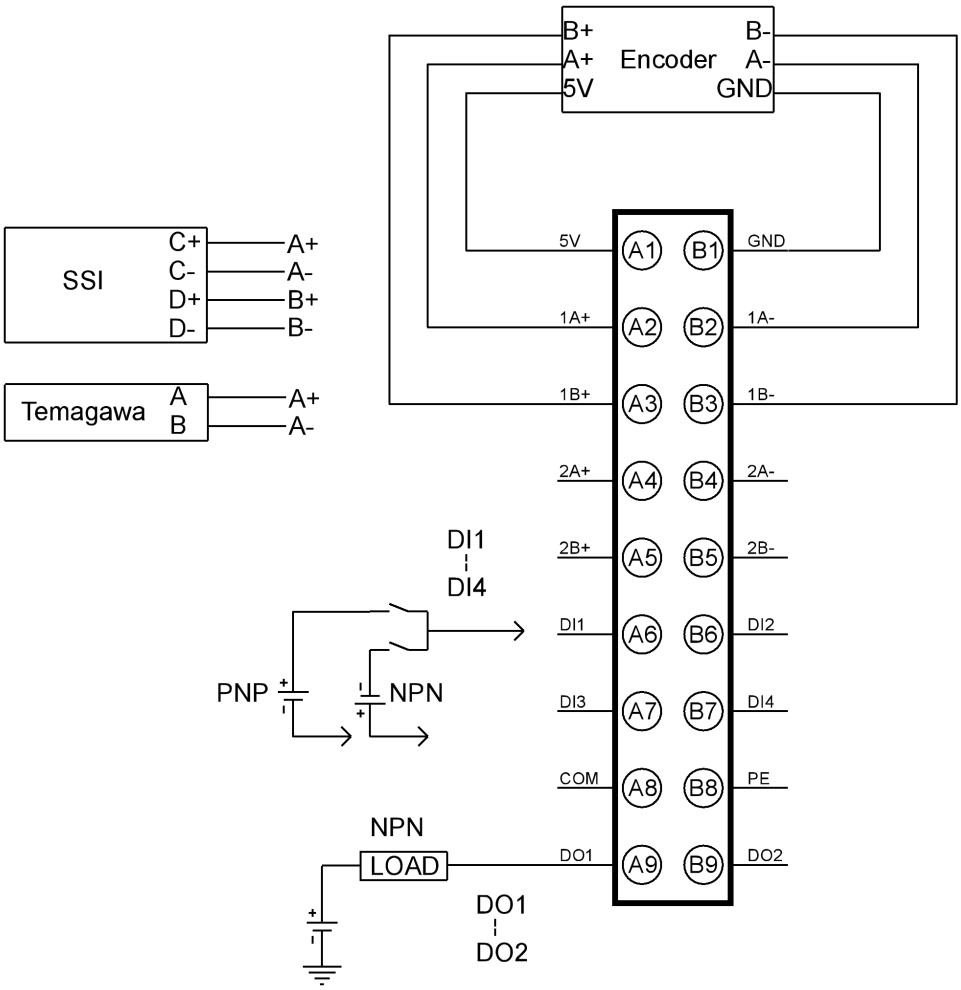

- Suitable for differential encoders that output 422 level characteristics, the differential encoder electrical Wiring diagram is shown in the figure below。

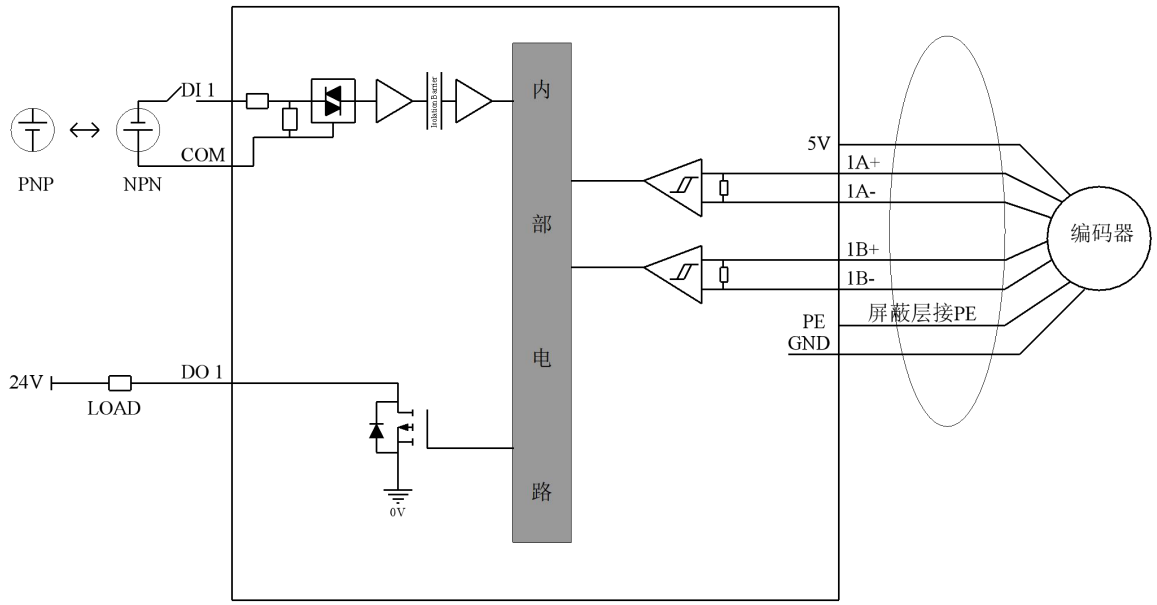

The module supports the connection of two differential encoders: 1A and 1B as a group, and 2A and 2B as a group (the figure shows that 1A and 1B are connected as a group of connections as an example, and if you need to connect a group of 2A and 2B, the connection method is the same.)

The module supports up to 4 DI digital inputs: DI1、DI2、DI3、DI4 (for example, if you need to connect DI2, DI3, or DI4, the connection method is the same.

The module supports connecting up to two DO digital outputs: DO1 and DO2 (the figure shows DO1 as an example, if you need to connect DO2, the connection method is the same.)

- The single-ended encoder of the NPN type is suitable for collector output transistors, and the electrical wiring diagram (NPN type) of the single-ended encoder is shown in the figure below。

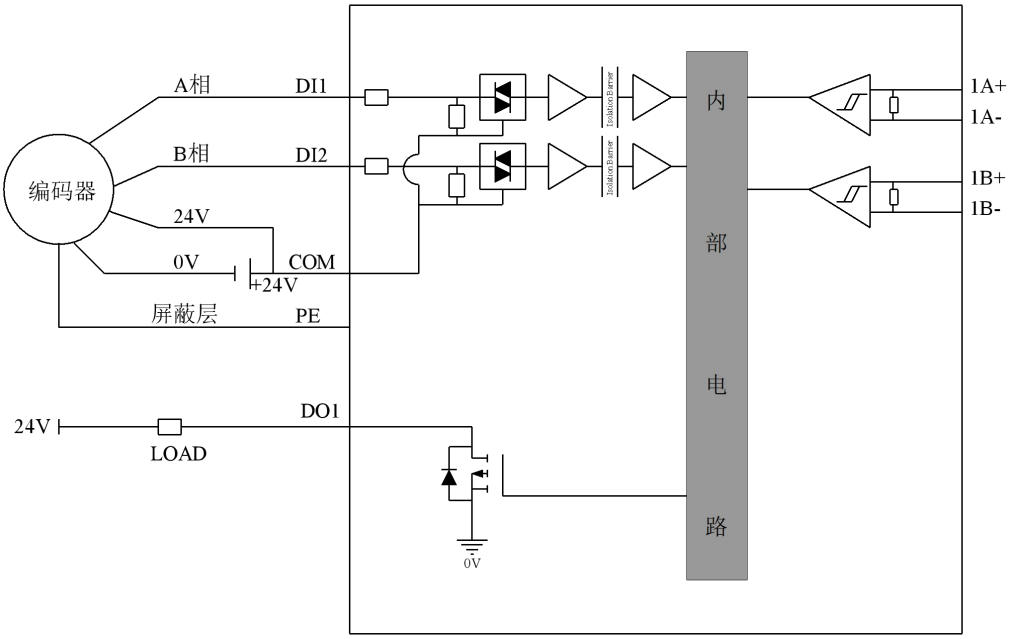

The module supports connecting up to two single-ended encoders: DI1 and DI2 as a group, DI3 and DI4 as a group (the figure shows that DI1 and DI2 are connected as a set of connections as an example, and if you need to connect a group of DI3 and DI4, the connection method is the same.)

The module supports the connection of two DO digital outputs: DO1 and DO2 (the figure shows DO1 as an example, if DO2 needs to be connected, the connection method is the same.)

- The single-ended encoder of the PNP type is suitable for collector output transistors, and the electrical wiring diagram (NPN type) of the single-ended encoder is shown in the figure below。

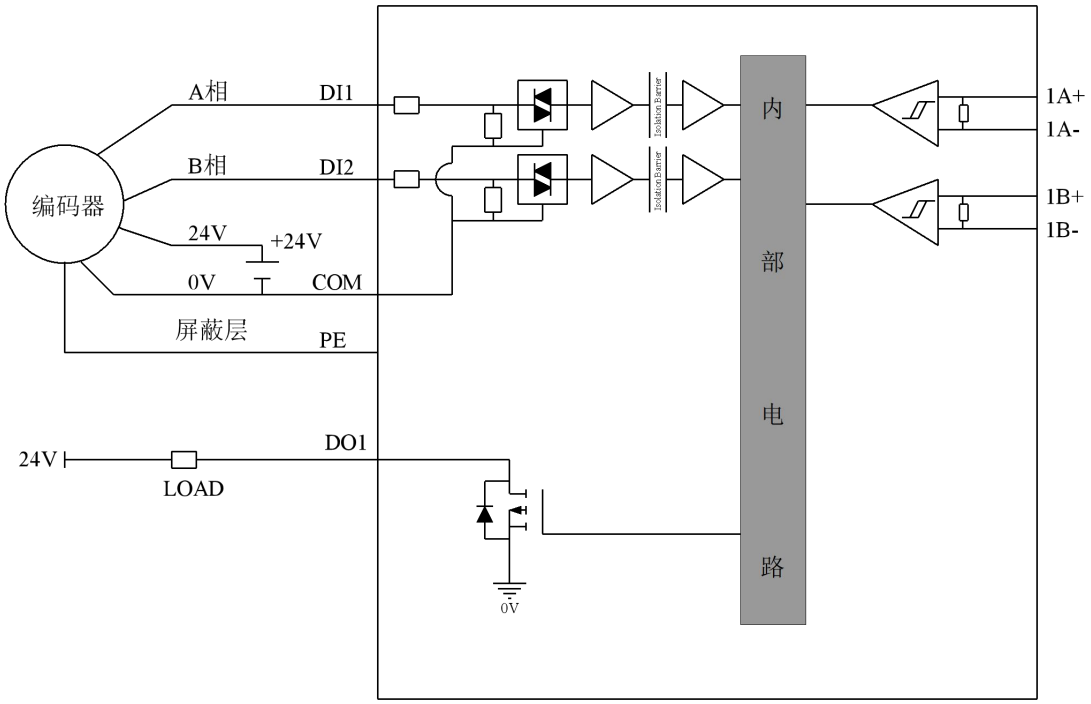

The module supports connecting up to two single-ended encoders: DI1 and DI2 as a group, DI3 and DI4 as a group (the figure shows that DI1 and DI2 are connected as a set of connections as an example, and if you need to connect a group of DI3 and DI4, the connection method is the same.)

The module supports connecting up to two DO digital outputs: DO1 and DO2 (the figure shows DO1 as an example, if you need to connect DO2, the connection method is the same.))

- The electrical wiring diagram of the encoder for SSI and Tama River encoders is shown in the figure below:

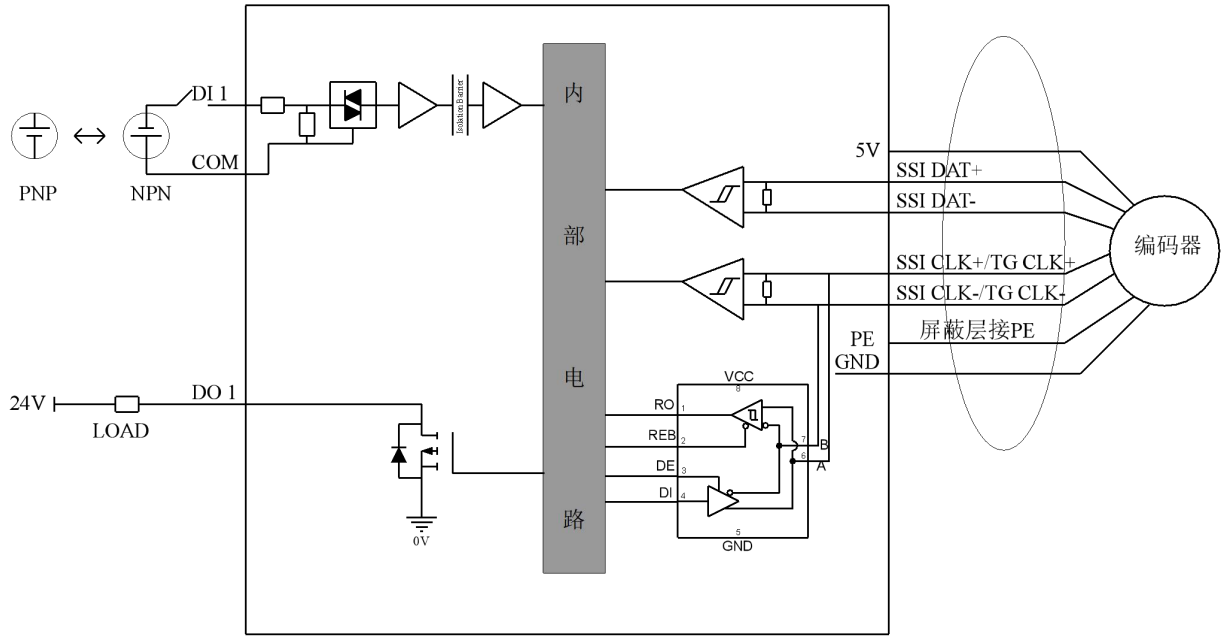

The module supports the connection of up to 2 SSI encoders/Tama River encoders: 1A and 1B as a group, and 2A and 2B as a group. (The figure shows that 1A and 1B are used as a group of connections as an example, and if you need to connect a group of 2A and 2B, the connection method is the same.)

Notes::

- DF30-M-2CNT The module supports the connection of up to 2 differential encoders: 1A and 1B for channel 1, and 2A and 2B for channel 2.
- DF30-M-2CNT The module supports the connection of up to 2 SSI encoders/Tama River encoders: 1A and 1B for channel 1, and 2A and 2B for channel 2.
- DF30-M-2CNT The module supports up to 4 DI digital inputs: DI1、DI2、DI3、DI4。
- DF30-M-2CNT The module supports up to 2 DO digital outputs: DO1 和 DO2
- DF30-M-2CNT When channel 1 is selected as a single-termination method, DI1 and DI2 correspond to the AB phase of channel 1, and when channel 2 is selected as a single-termination method, DI3 and DI4 correspond to the AB phase of channel 2 respectively.

4.16 DF30-M-1COM-232/485/422

4.16.1Part description

Light				
	LED No	Status and Meaning	LED No	Status and Meaning
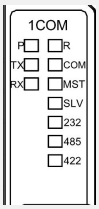	PWR	Green: The system power supply is normal	RUN	Green: The module is running normally
		Green extinguishing: The system power supply is abnormal		Green extinguishing: The system power supply is abnormal
				Green flashing: Configuration failure/failsafe mode
	TX	Green: Data sent	COM	Green Light: Select this mode
		Green extinguishing: No data transmission		Green extinguishing: This mode is not used
	RX	Green light: Data reception	MST	Green Light: Select MASTER mode
		Green extinguishing: No data reception		Green extinguishing: This mode is not used
			SLV	Green: Select SLAVE mode
				Green extinguishing: This mode is not used
			232	Green light: RS232 communication protocol is used
				Green extinguishing: This communication protocol is not used
			485	Green light: RS485 communication protocol is used

				Green extinguishing: This communication protocol is not used
			422	Green light: RS422 communication protocol is used
				Green extinguishing: This communication protocol is not used

Terminal block					
Serial number	Signal	illustrate	Serial number	Signal	illustrate
A1	24Vo	24V power output	B1	0Vo	Power output location
A2	5Vo	5V power output	B2	0Vo	Power output location
A3	TXD+	RS485 data positive end/RS422 transmitting positive end	B3	TXD-	RS485 data negative end/RS422 send negative end
A4	Tres+	RS485 terminal resistor positive/RS422 transmit terminal resistor positive	B4	Tres-	RS485 terminal resistor negative / RS422 transmit terminal resistor negative end
A5	RXD+	RS422 receives positive end	B5	RXD-	RS422 receives negative end
A6	Rres+	RS422 receiver terminal resistor positive end	B6	Rres-	The RS422 receiver terminal resistor is negative
A7	CTS	RS232 clear send	B7	RTS	RS232 sends data requests
A8	RXD	RS232 data reception	B8	TXD	RS232 data transmission
A9	GND	Reference Location	B9	GND	Reference Location

4.16.1 Specifications

Structural parameters	
Dimensions (WxHxD)	12mm x 100mm x 80mm
Weight	71.5g
Power Parameters	
The rated voltage of the USYS bus input power supply	5V DC +20%/-15% (4.25V DC~ 6V DC)
The USYS bus input power supply is rated current	<60mA (typical at 5V DC)
UIN power supply input rated voltage	24 V DC +20%/-15% (20.4V DC~28.8V DC)
UIN power supply input current rating	60mA (typical at 5V DC)
UIN power input anti-reverse plug protection	Yes
The module prevents the spread of power failures	Yes
Functional parameters	
Module type	Communication gateway module
Number of channels	1 way
Communication interface type	The module only communicates with the Yes1 serial port 1 RS232 1 RS485 1 RS422
Communication distance	RS232: up to 15m RS422/RS485: Max. 1200m
Whether to quarantine	Yes, the channels are isolated from the interior, and the channels are not isolated
Terminal matching resistors	Short connection at the near end of the terminal resistor port through the user's external wiring selection

Output load	Voltage standard value 24V, maximum current: 200mA; Voltage standard value 5V, maximum current: 500mA Two output loads can be output simultaneously
Software parameters	
Data size	A maximum of 128 bytes per channel
Error diagnosis	Take the initiative to report
Number of modules supported	A single coupler can mount up to 6 modules
Number of channels	Up to 18 channels Yes
Modbus protocol	RTU
Data transmission baud rate	1200 bps~4687500 bps (Default 9600 bps)
Working mode	Modbus Master/Modbus Slave/Free Transmission (Default Modbus Master)
Communication interface	RS485/RS232/RS422 (default RS485)
Data bits	7-bit/8-bit (default 8-bit needs to be checked when configured as 7-bit)
Check position	No check/odd/even check
starting position	1st place
stop position	1-bit, 2-bit (default 1-bit)
Frame interval time	The interval between receiving the slave response and sending it again in master mode is 0~65535, in ms.
Response timeout	The master waits for the timeout time for the slave station to respond, or the timeout time for the response in transparent mode.
Polling time	The delay between when the master receives the response message from the slave to the next command is sent in the range 0~65535, in ms.
Read timeout	Keep last input/clear input value
Data output mode	Polling mode/event triggering/level triggering/rising edge triggering. (Event trigger is data output when the

	output data changes, and level trigger is the main station channel control word is 1.)Trigger communication, and the rising edge triggers the communication when the main station channel control word is from 0 to 1)
Slave Station ID	The module works in the ID number of the slave.
Response delay	The working mode is to receive a message from the master station when the slave station is received, and the delay response is made to the master station and the unit ms.
Byte order conversion	The working mode is to exchange every two transmitting and receiving data positions during free transmission.
Wiring parameters	
Connectivity technology	PUSH-IN type terminal blocks
Connection type	System/field power/input
Crimping area of the wire	0.34～1.5mm
Stripping length	10mm
Installation method:	DIN-35 TYPE RAIL
Material parameters	
Color	Pantone 419C
Shell material	PC PLASTIC
Environmental requirements	
Allowable ambient temperature (during operation)	-20～55℃
Allowable ambient temperature (storage)	-40～85℃
Types of protection	IP20
Contamination level	2. Comply with IEC 61131-2 standard
Working altitude	0～2000m
Relative humidity	5～95%RH

(non-condensing)	
Anti-vibration	1g, in accordance with IEC 60068-2-6 standard
Impact resistance	15g, in accordance with IEC 60068-2-27
EMC ANTI-INTERFERENCE RATING	Zone B, IEC61131-2
Corrosion resistance	Compliant with IEC 60068-2-42 and IEC 60068-2-43 standards

4.16.1Wiring diagram

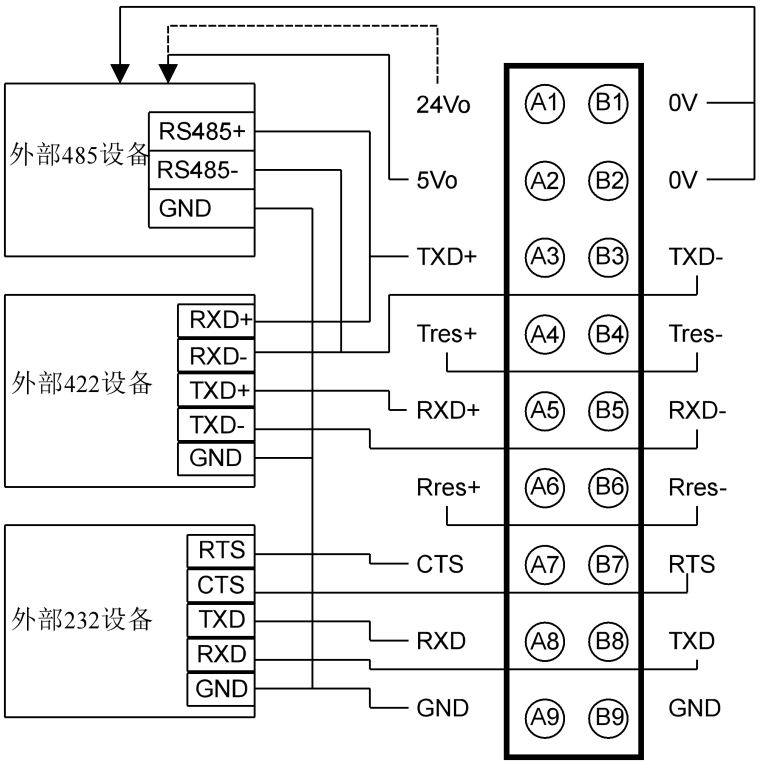

5 Configuration example

5.1 CODESYS V3.5.19 software example

In this chapter, CODESYS V3.5 SP19 is used as the configuration software to introduce the use of the adapter DF30-C-MD-TCP, with the DFC501 controller as the Modbus TCP master and the DF30-C-MD-TCP as the Modbus TCP slaveDF30-M-16DI-P/N as a remote IO module.

■ Use DFC501 controller as Modbus TCP master

Right-click on the item and click Add Device, select the supplier Hangzhou Liwei Technology Co. LTD, find the Modbus TCP master and double-click Add:

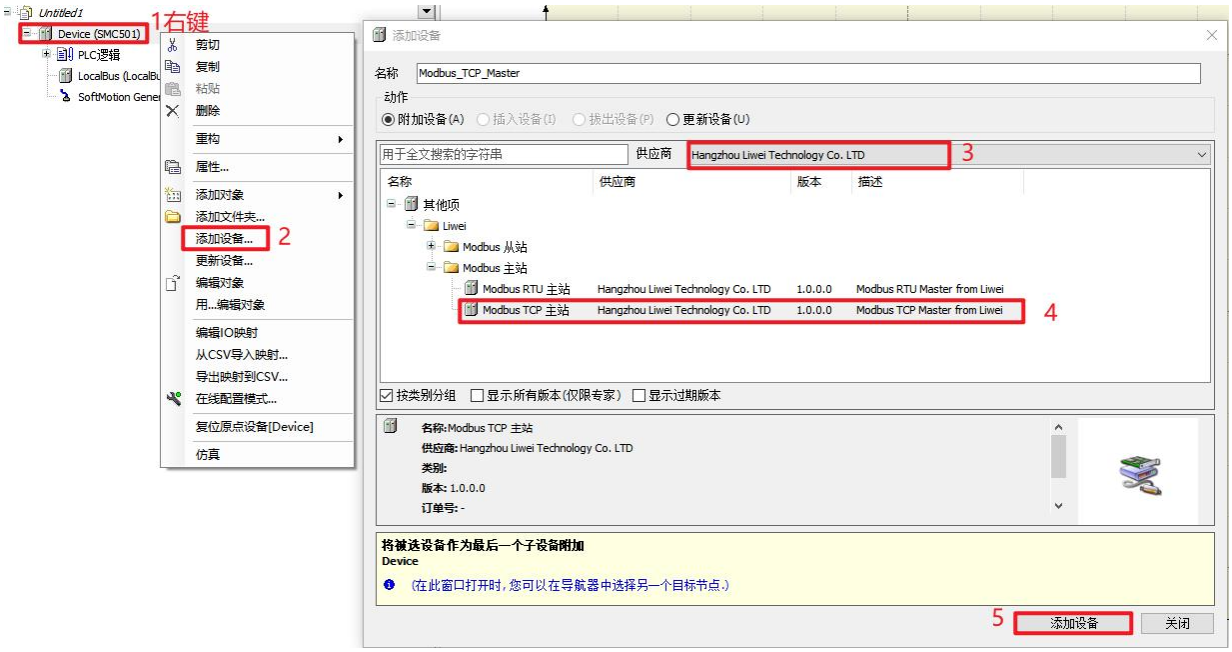

■ Add Modbus TCP device

Right-click Modbus_TCP_Master Add Device (Modbus TCP Master), find the Modbus TCP device, and double-click Add:

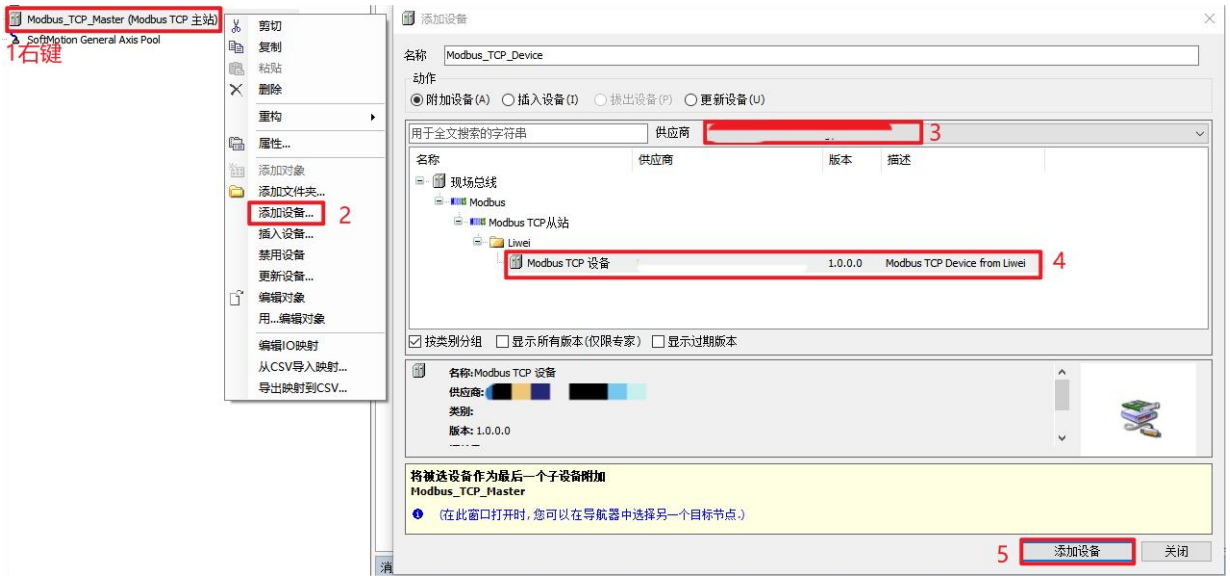

■ Set the Modbus TCP slave IP

Double-click Modbus_TCP_ Device to set the Modbus TCP device IP to the adapter IP to ensure that the Modbus slave IP, Modbus master IP, and PC local network IP are in the same network segmentThe adapter IP is set to 192.168 in advance1.254. For how to modify the adapter IP, refer to the Coupler IP Address Setting section in CODESYS V3.5.19 Software Examples.

Modbus Master IP Settings:

Modbus slave IP settings:

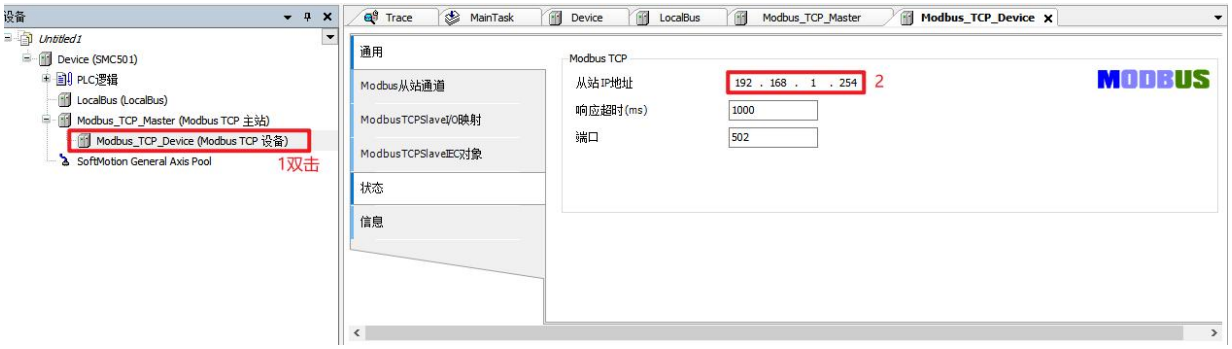

IP settings for the local network on the PC side:

■ Modbus TCP Slave channel added

Go to the slave channel configuration screen and click Add Remote IO:D F30-M-16DI-P/N

Take the topology of DF30-C-MD-TCP+DF30-M-16DI-P/N as an example: add the first channel to modify the channel name to DF30-M-16DI-P/N, configure the function code operation as a read-hold register, and Modbus HOLD register address: the offset is 656 (decimal, starting from 0)., corresponding PLC address: numbered from 40001, the process data of DF30-M-16DI-P/N is mapped to PLC address 40657, the data size is 2 bytes, the register address of the remote IO and the PCL address mapping relationship refer to the register address mapping illustrate

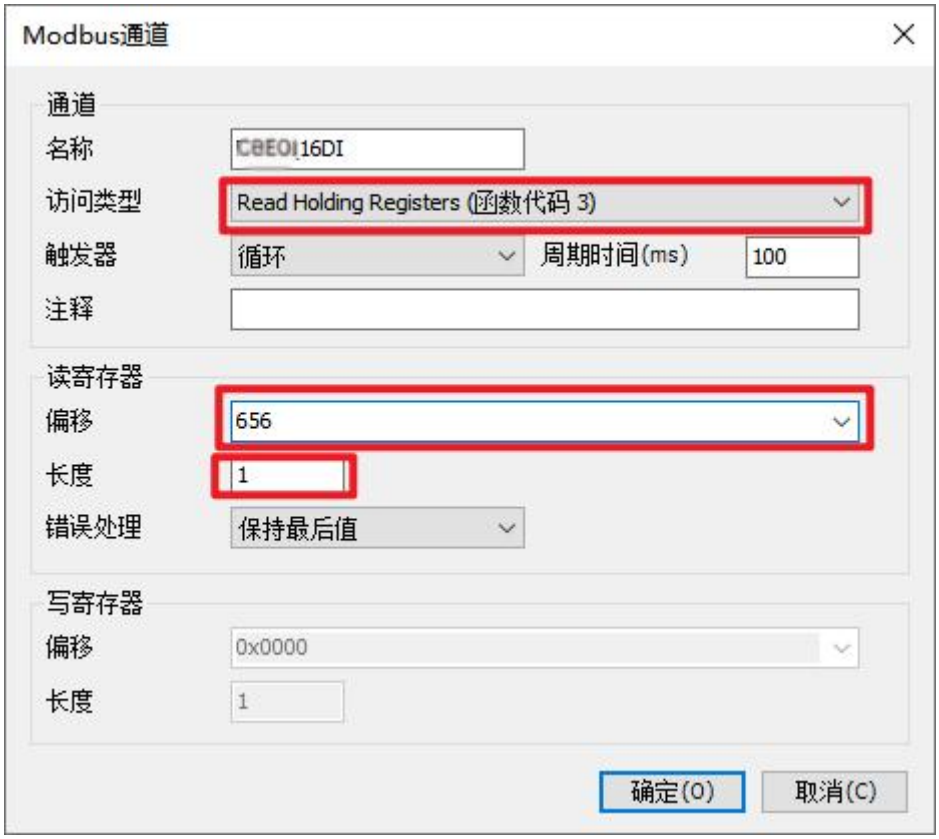

■ Log in to download

Click Login and download the configuration to the controller, click Start after the download is completed, you can see that the RUN light of the adapter is always on, and the software icons are green without error, indicating that the connection has been successfully established.

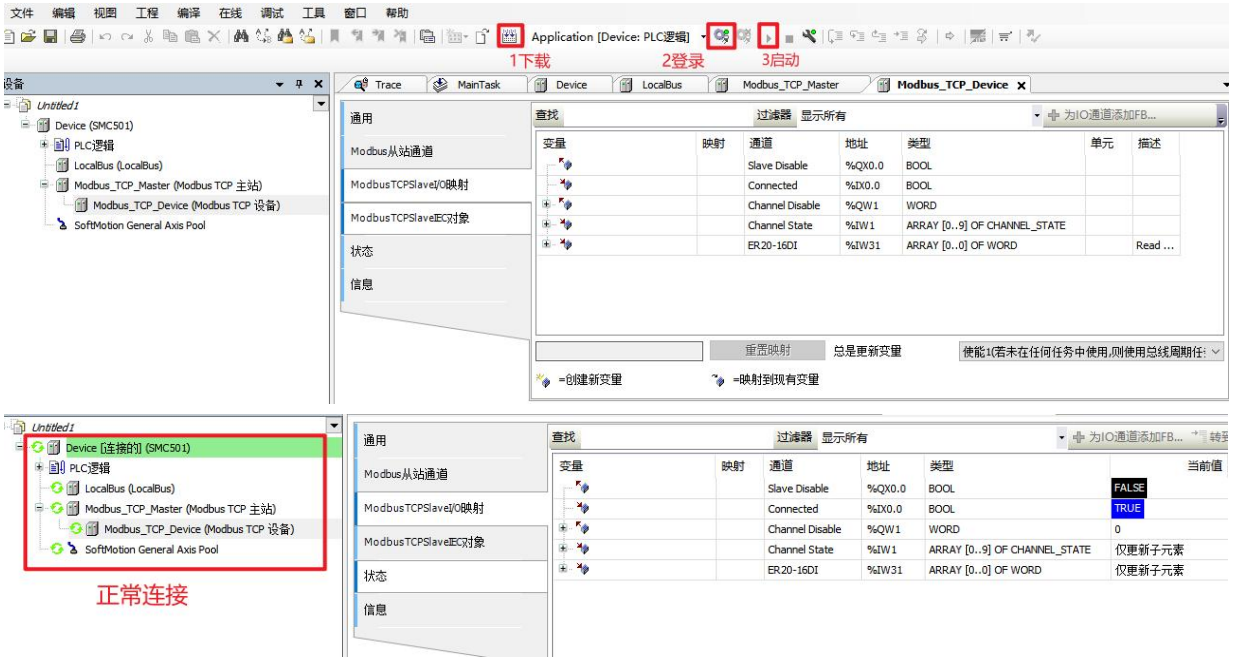

■ Once all channels have been added, they need to be downloaded back to the controller

Go to the I/O mapping interface and change the Always Update variable to Enable 1

■ Web page configuration function

IP address configuration：

- Configure the adapter IP via the web page or DIP switch, Yes reset to the default address (192.168.1.254)。
- Modbus the operation priority of the configuration is greater than that of the web page configuration, and the operation of the Mosbus configuration must be stopped before using the web page to manage and configure the Modbus TCP adapter, for example, the operation of the Modbus configuration must be stopped when the Modbus Poll software is disconnected or the Modbus Poll software is closed.

Module parameter configuration:

- Channel filtering time (digital amount), Signal range (analog), sensor type (thermoresistor/thermocouple), etc.
- Operation process: Log in to the adapter web interface, select the module location, set the parameters, save and restart to take effect.

■ Coupler IP address configuration

IP address setting: When the IP address of the adapter is lost, forgotten, or other abnormal situations, dial the DIP switch to 254 and restart the adapter, and the IP address of the resettable adapter is 192.168.1.254

Web page configuration IP

- Operation process: Dial the DIP switch to 0 or 255, restart the adapter, wait for the module initialization to complete (3~5s), log in to the adapter web interface, and the user modifies the network information of the adapter: MAC address (read-only), IP address (read-write), subnet mask (read-write), click the save button, and wait for 10s to automatically jump to a new web page (premise:). The network information of the newly configured adapter is in the same

network segment as the current configured PC, if it is not in the same CIDR segment, the CIDR segment of the configured PC needs to be reset).

DIP switch configuration IP

➢ The DIP switch can be used to set the last byte of the adapter's IP address, i.e. the D byte of the IP address A:B:C:D, and the IP ground

The A/B/C bytes of the address can only be modified through the web page, and the restart takes effect.

➢ When the DIP switch is dialed to 0 or 255, the adapter IP address adopts the IP configured on the web page. When the dial value is greater than 0 and less than 254.At this time, the last byte D of the adapter's IP is the current dial value, and the first three bytes are the A/B/C of the web page configuration, and the restart takes effect. When the DIP switch is set to 254, it can be reset to the default address (192.168.1.254) and the restart takes effect.

■ Remote IO module parameter configuration

■ Example:

Log in to the adapter web interface, select the DF30-M-16DI-P/N module location, enter the DI module configuration interface, set the filtering parameters of each channel and save it to take

effect, and click Back to return to the main interface for the next valid module configuration

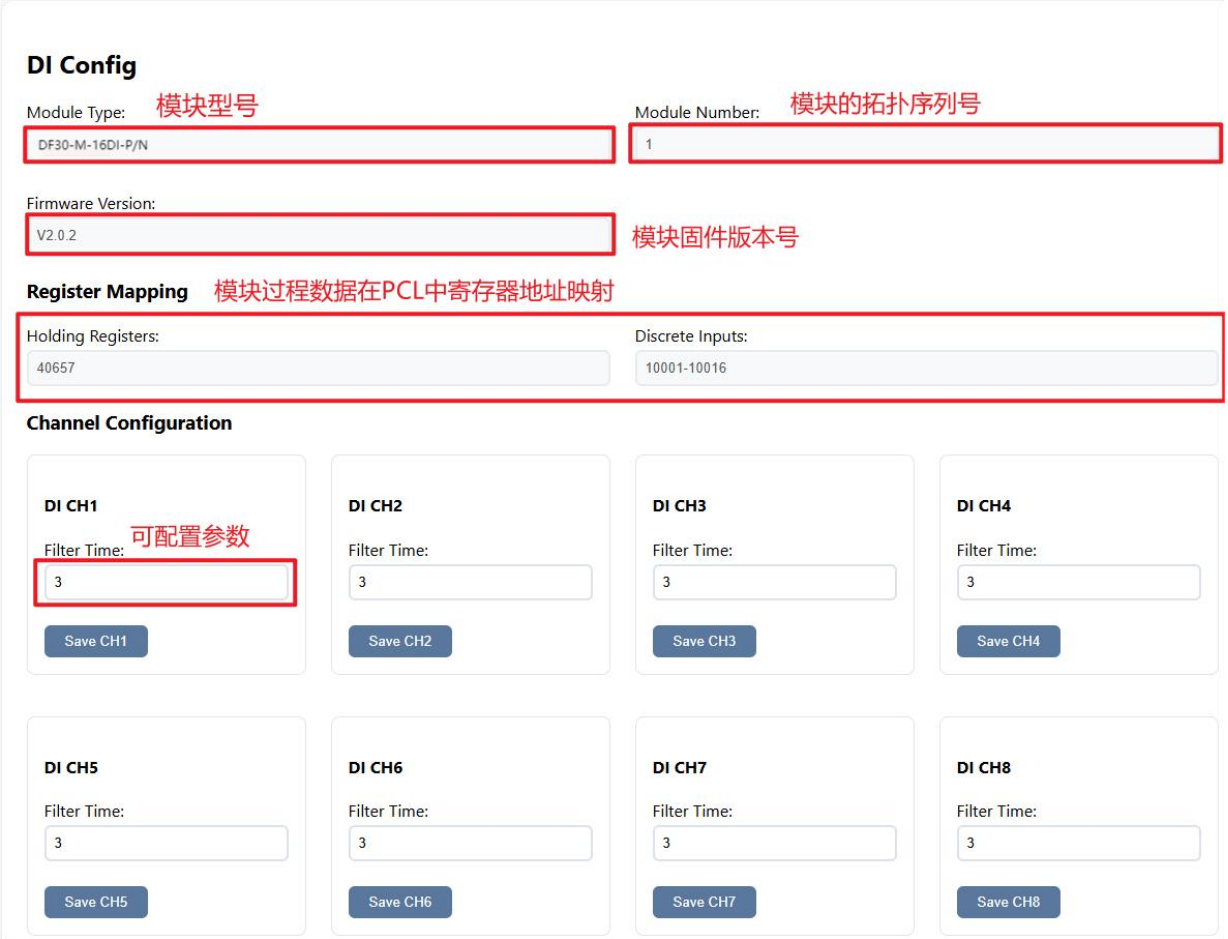

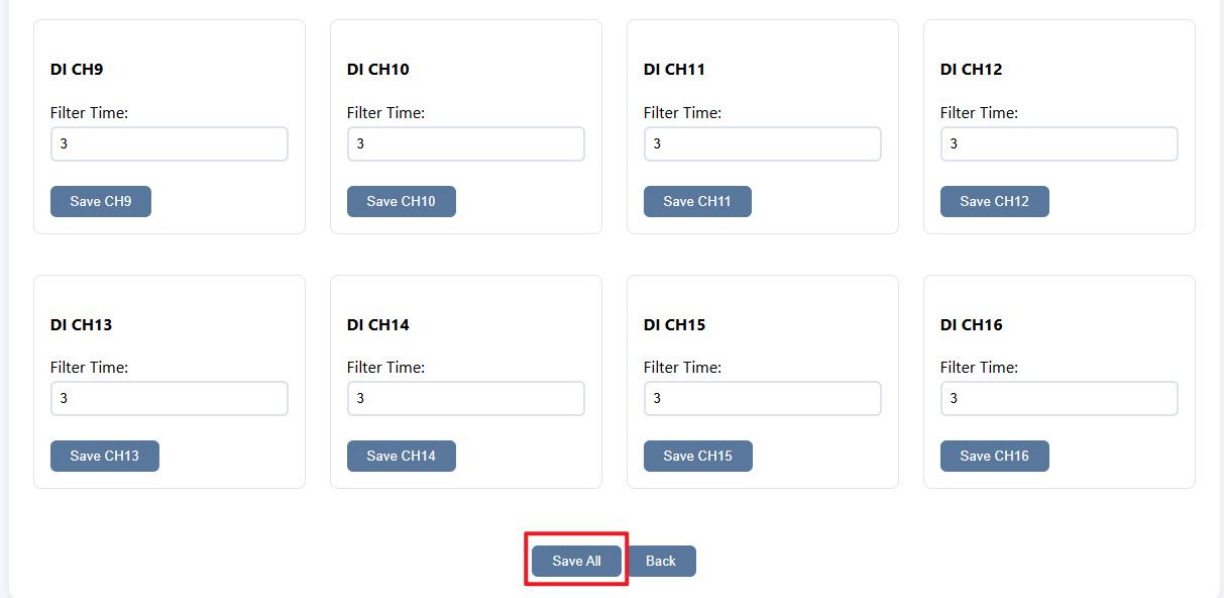

- **Invalid module display:**

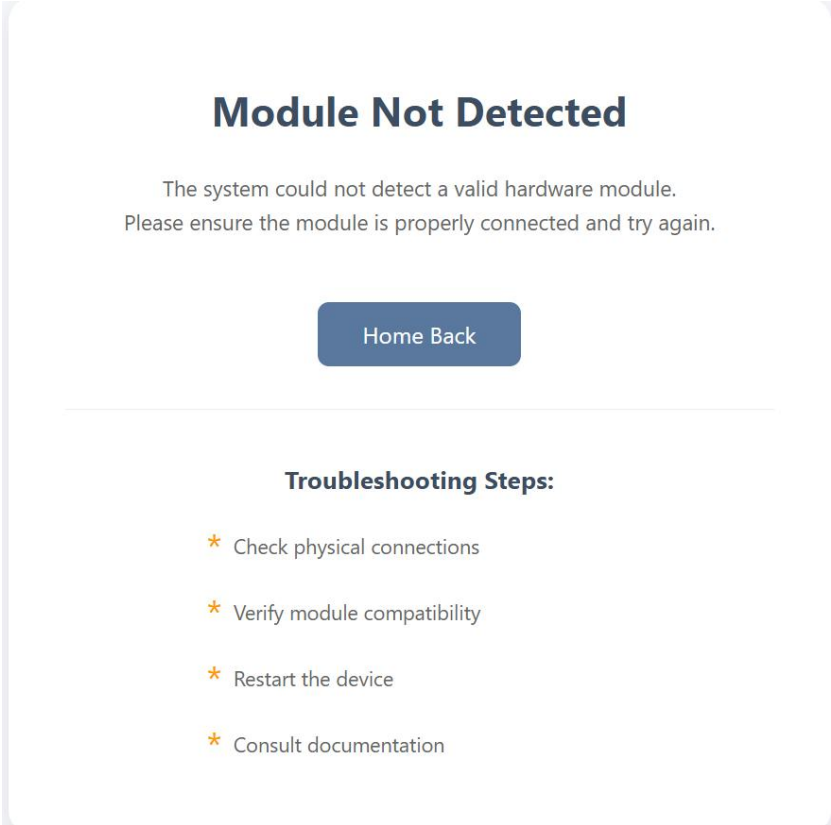

■ Process data mapping

Example of the topology of DF30-C-MD-TCP+DF30-M-16DI-P/N:

Add the first channel to modify the channel name as DF30-M-16DI-P/N-Read-hold: Configure function code operation as read-hold register, Modbus HOLD register address: offset is 656 (decimal, from 0), length 1, corresponding PLC address: number from 40001, DF30-M-16DI-P/ N's process data is mapped at PLC address 40657, and the data occupies 1 hold register;

Or add channel DF30-M-16DI-P/N-Read discrete input: configure function code operation to read discrete input registers, Modbus Discrete input register address: offset address 0 (decimal, starting from 0), length 16, corresponding PLC address: numbering from 10001, DF30-M-16DI-P/ N process data mapping at PLC address 10001-10016; For the relationship between the register address and the PCL address mapping of the remote IO, refer to the register address mapping illustrate

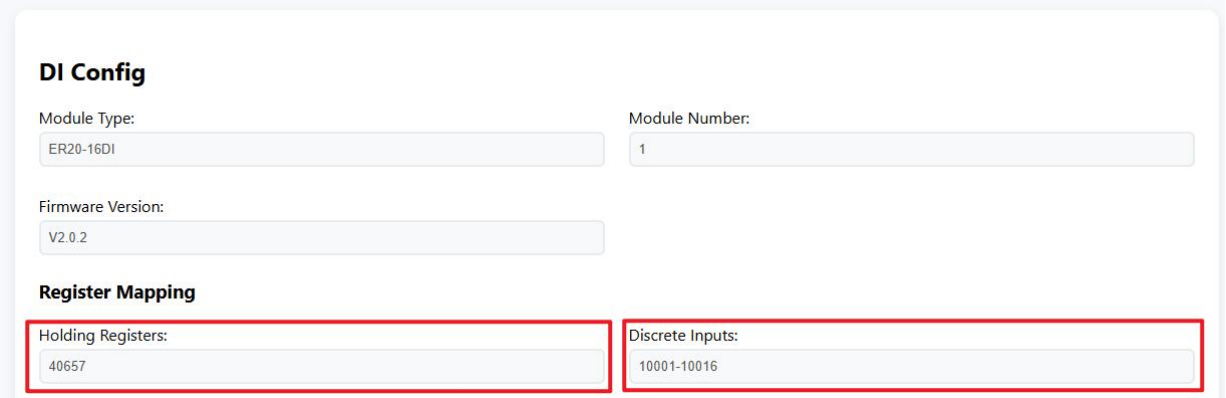

RXPDO				
Serial number	**Type of information**	**Register address**	**data format**	**remark**
1	Hold registers:	40657	UINT16	(Read Operation).
2	Discrete Input Registers:	10001-10016	BIT（Discrete）	(Read Operation).

The effective voltage of channel 1 input of the DF30-M-16DI-P/N is 24V, and the process data shows that the hold register: 0x0001, and the discrete data register bit0=1

The effective voltage of channel 16 input of the DF30-M-16DI-P/N is 24V, and the process data shows that the holding register: 0x8000, and the discrete data register BYTE[1]=0x80

■ Coupler firmware version query

Way 1

Log in to the configuration page and view the adapter firmware version number on the homepage:

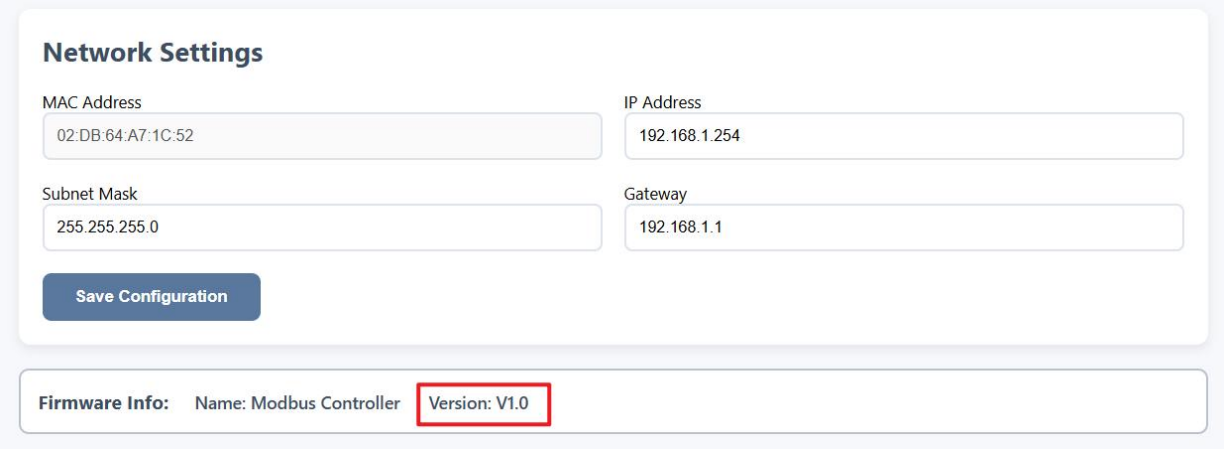

Way 2

Serial number	Type of information	Register address	data format	remark
1	Hold registers:	40002	UINT16	(Read Operation).

Add channel system diagnostics - coupler firmware version: read-hold register, address offset 1, length 1:

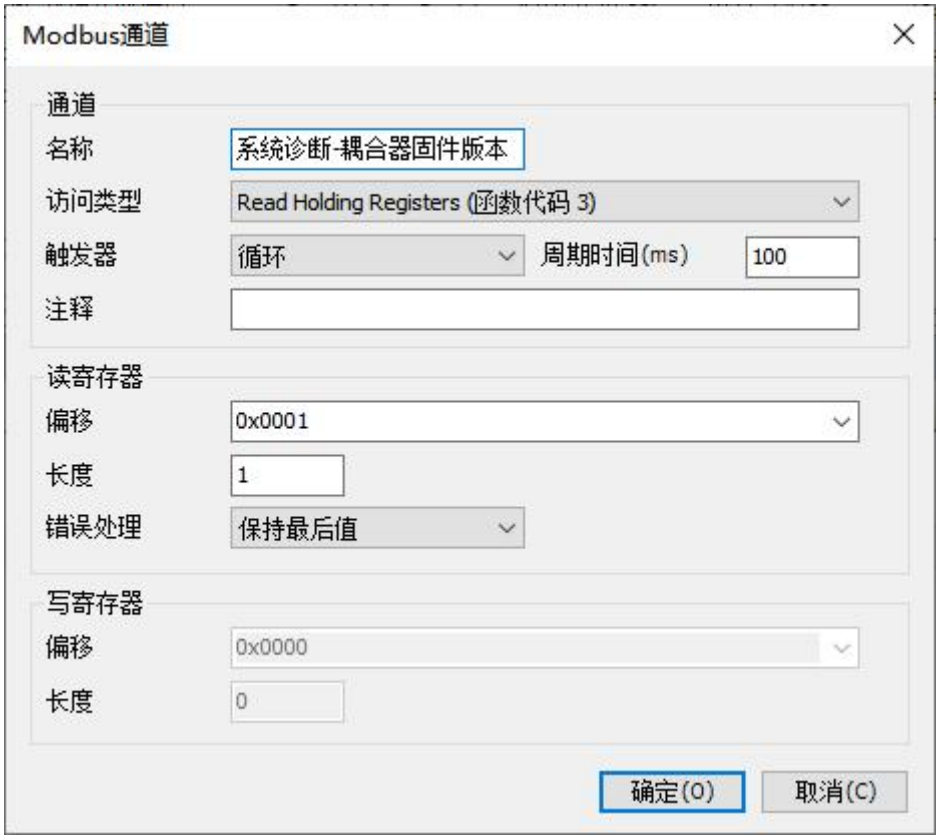

Note: The firmware version number is decimal value of 16#0100, which means that the version number is V1.0.0.

■ Module information query

Example of the topology of DF30-C-MD-TCP+DF30-M-16DI-P/N:

The module firmware version can also be queried via the web interface:

The module firmware version is queried by configuration addressing: The firmware version number is 16#0202, indicating that the version number is V2.0.2:

Serial number	Type of information	Register address area	data format	remark
1	Module ID[0]	40004	UINT16	0x11
2	Module firmware version[0]	40036	UINT16	Version number of DF30-M-16DI-P/N (HEX: high 8 bits = main version, low 8 bits = secondary version).

■ Module diagnostics

Example of the topology of DF30-C-MD-TCP+DF30-M-16DI-P/N：

Serial number	Type of information	Register address area	data format	remark
1	Module Fault Information [0]	40068	UINT16	(If high 8 bits = 0, then low 8 bits = module fault code: refer to fault code illustrate). (If the high 8 bits = 1~8, the low 8 bits = channel fault code: refer to the fault code illustrate).
2	Module Packet Loss Count [0-1]	40100~40101	UINT32	DF30-M-16DI-P/N Packet Loss Times (Double Word Address) (High 16 bit + low 16 bit combination)

6. appendix

5.2 Trouble code description

Fault location	Fault name	Trouble code	Solution/Cause
Coupler	The protocol stack is not scanned to the module	1	Check whether the module is tightly plugged in and whether the buckle is fastened
	The number of modules is exceeded	2	Check the number of backplane modules
	The configuration IO module does not match the card that is actually scanned	3	Check whether the configuration module model and sequence are consistent with the actual module
	The configuration configuration list is not downloaded	4	
	Hot-swap failed, and the module model was wrong	5	Check whether the newly plugged module Signal is the same as the original
module	The backplane bus timed out	1	Check that the module is installed in place
	Flash read failure	3	Power back or contact the vendor
	Wrong configuration parameters	4	Check whether the configuration parameters are reasonable
	Abnormal power supply	5	Check the power supply
	ADC abnormalities	6	Power back or contact the

			vendor
	DAC abnormalities	7	Power back or contact the vendor
passage	Overcurrent	1	Check if the load is too large
	Overheating	2	Check the external wiring and whether the load is too large
	short circuit	3	Check the external wiring of the channel
	Open circuit/disconnection	4	Check the external wiring of the channel
	Overflow	5	Check if the external input signal is normal
	underflow	6	Check if the external input signal is normal
	Hyper Limit	7	Check if the external input signal is normal
	Exceeding the lower limit	8	Check if the external input signal is normal
	Wrong sensor type	9	Check whether the access sensor and the configuration item match