DF30-C-CC-FB User Manual

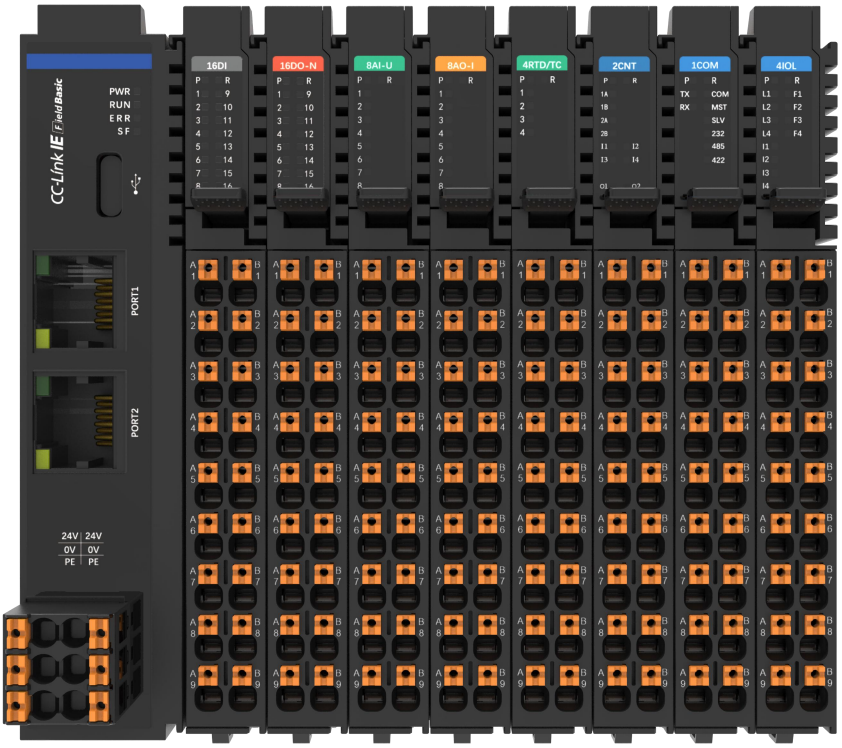

Contents

1 Preface 5
2 Safety Precautions 7
3 Product information 15
3.1 Model and nameplate description 15
3.2 Specifications 17
3.3 Wiring schematic 19
3.4 System block diagram 19
4 Installation and disassembly 20
4.1 Installation dimensions 20
4.2 Installation guide 21
4.3 Disassembly method 23
4.4 Notes 24
5 Module description 25
5.1 DF30-M-16DI-P/N 25
5.1.1 Part description 25
5.1.2 Specifications 26
5.1.3 Wiring diagram 28
5.2 DF30-M-32DI-P/N 28
5.2.1Part description 28
5.2.2 Specifications 30
5.2.3 Wiring diagram 32
5.3 DF30-M-16DO-N 32
5.3.1 Part description 32
5.3.2 Specifications 33
5.3.3 Wiring diagram 36
5.4 DF30-M-16DO-P 36
5.4.1 Part description 36
5.4.2 Specifications 37
5.4.3 Wiring diagram 40

5.5 DF30-M-32DO-P 40
5.5.1 Part description 40
5.5.2 Specifications 42
5.5.3 Wiring diagram 45
5.6 DF30-M-32DO-N 46
5.6.1 Part description 46
5.6.2 Specifications 47
5.6.3 Wiring diagram 50
5.7 DF30-M-4AI-UI 50
5.7.1 Part description 50
5.7.2 Specifications 51
5.7.3 Wiring diagram 54
5.8 DF30-M-4AO-UI 55
5.8.1 Part description 55
5.8.2 Specifications 56
5.8.3 Wiring diagram 58
5.9 DF30-M-8AI-I 59
5.9.1 Part description 59
5.9.2 Specifications 60
5.9.3 Wiring diagram 63
5.10 DF30-M-8AO-I 63
5.10.1 Part description 63
5.10.2 Specifications 64
5.10.3 Wiring diagram 67
5.11 DF30-M-8AI-U 67
5.11.1 Part description 67
5.11.2 Specifications 68
5.11.3 Wiring diagram 71
5.12 DF30-M-8AO-U 71
5.12.1 Part description 71

5.12.2 Specifications 72
5.12.3 Wiring diagram 75
5.13 DF30-M-4RTD/TC 75
5.13.1 Part description 75
5.13.2 Specifications 76
5.13.3 Wiring diagram 81
5.14 DF30-M-8TC 81
5.14.1 Part description 81
5.14.2 Specifications 82
5.14.3 Wiring diagram 84
6 Configuration example 85
6.1 DF30-C-CC-FB IP Setting 85
6.1.1 Set the IP address through the dip switch. 85
6.1.2 Setting the IP address through Conf_TestTool_To Master.exe 86
6.1.3 Dialing code settings for IP and the priority of settings for the upper computer's IP 89
6.1.4 Reset IP address 89
6.2 IO Data Allocation and Explanation 90
6.3 DF30-C-CC-FB Configure the routine in the GX3 software environment 91
6.3.1 Install the CSP file 91
6.3.2 Create project 92
6.3.3 Establish the configuration. 93
6.3.4 From the station parameter setting instructions 103
6.3.5 Configuration Description 116
7 Appendix 121
7.1 Explanation of Fault Codes 121

1 Preface

■ Document Overview

➢ The DF30-C-CC-FB communication interface module (hereinafter referred to as "this module") is connected to the CCLINK IEFB network as a CCLINK IEFB slave station. Through this module, local modules for digital, analog, temperature and other quantities can be expanded.

This manual provides basic information about the product, electrical installation, programming examples, and mechanical installation, etc.

■ Compliant with the standards

The relevant certification categories, instructions and standards can be found in the table below. Whether the relevant certification qualifications have been obtained shall be determined by the product label.

Certification Name	Instruction Name		Standard
CE	EMC	2014/30/EU	EN 61131-2
	LVD	2014/35/EU	EN 61010-1 EN 61010-2-201
	RoHS	2011/65/EU amended by (EU) 2015/863	EN IEC 63000

■ More information

Name of the document	Data code	Content Introduction
《DF30-C-CC-FB-Use Manual》		Introduce product information, mechanical installation, electrical

		installation, program debugging, fault diagnosis and version matching instructions, etc.

■ Version Change Log

Revision Date	Release version	Change details
2025-09-21	V1i0i0	The manual was first released.

■ ■ Warranty Statement

Under normal conditions, if the product malfunctions or is damaged, warranty service is provided within the warranty period (refer to the order form for the warranty duration). Repair fees apply after the warranty period expires.

During the warranty period, repair fees will be charged for product damage caused by the following circumstances.

- Damage resulting from operation of the product contrary to the instructions specified in the manual.
- Product damage caused by fire, flooding, or abnormal voltage.
- Product damage resulting from the use of this product for unintended functions.
- Product damage caused by exceeding the product's specified usage parameters.
- Secondary product damage caused by force majeure events (natural disasters, earthquakes, lightning).

Service fees are calculated according to the manufacturer's unified standards; in the event of a contract, the contract shall take precedence.

For detailed warranty information, please refer to the Product Warranty Card.。

2 Safety Precautions

■ Safety Statement

➢ This chapter explains the safety precautions that must be observed when using this product. Before using this product, please read the User Manual carefully and fully understand the relevant safety precautions. Failure to comply with the provisions outlined in the Safety Precautions may result in death, serious injury, or equipment damage.

➢ The 'Danger,' 'Warning,' and 'Caution' statements in this manual do not represent all safety requirements and serve only as supplements to the complete Safety Precautions.

➢ This product must be operated within an environment that complies with the design specifications; otherwise, malfunctions may occur. Functional abnormalities or component damage caused by noncompliance with relevant regulations are not covered under the product warranty.

➢ Our company shall bear no legal liability for personal injury, property damage, or other losses resulting from failure to comply with this manual or improper operation of the product.

■ Safety Level Definition

Danger: Indicates that failure to comply with the specified procedures will result in death or serious bodily injury.

Warning: Indicates that failure to follow instructions may result in death or serious bodily injury.

Attention: Indicates that failure to follow instructions may result in minor bodily injury or equipment damage.

■ Safety Precautions

➢ In this manual, product illustrations sometimes show the product with its enclosure or safety cover removed to reveal detailed components. When using this product, always ensure the enclosure or protective cover is properly installed and operate in accordance with the User Manual.

- Product illustrations in this manual are for reference only and may differ slightly from the product you ordered; please refer to the actual product received.
- Operators must implement mechanical protective measures to ensure personal safety. Please wear and use the necessary protective equipment, such as safety shoes, protective clothing, safety glasses, protective gloves, and sleeves.

Unpacking Inspection
Attention: ● If any damage, rust, signs of prior use, or other issues are found on the product or its accessories during unpacking, do not install! ● If water ingress, missing components, or damaged parts are discovered inside the product during unpacking, do not install! ● Please carefully verify the packing list. If the items do not correspond to the product description, do not install! ● Before unpacking, inspect the external packaging for any damage, wetness, moisture, deformation, or other anomalies. ● Please open the packaging in the specified order; vigorous impacts are strictly prohibited! ● Upon unpacking, inspect the device and accessories for any surface damage, corrosion, or dents. ● After unpacking, carefully check the packing list to verify that the device, accessories, and documentation are complete.
Storage and Transportation
Attention: ● When handling the product, always lift and place it gently. Be aware of objects underfoot to prevent tripping or dropping, which may cause injury or product damage! ● When manually handling the product, be sure to firmly grasp the product housing to prevent any components from falling off, which could cause injury! ● Strictly comply with the product’s specified storage and transportation conditions; otherwise, the product may be damaged.

● Avoid storing and transporting the product in environments exposed to water splashes, rain, direct sunlight, strong electric fields, strong magnetic fields, or severe vibrations.

● Do not store the product for more than 3 months; if extended storage is necessary, apply enhanced protection measures and conduct required inspections.

● Ensure the product is securely packaged before vehicle transport; for long-distance transport, use a sealed container.

● It is strictly forbidden to transport this product together with equipment or items that may adversely affect or damage it.

During installation

Danger:

● Only personnel trained in electrical equipment and possessing electrical knowledge are authorized to operate. Operation by unqualified personnel is strictly prohibited!

Warning:

● Before installation, thoroughly read the product User Manual and Safety Precautions!

● Do not install this product in locations subjected to strong electric fields or strong electromagnetic interference!

● Before commencing installation procedures, ensure the mechanical strength of the installation site is adequate to support the device weight; otherwise, mechanical hazards may occur.

● During installation procedures, avoid wearing loose clothing or accessories to prevent the risk of electric shock!

● When installing the product in an enclosed environment (such as within a cabinet or chassis), ensure adequate cooling using cooling devices (such as fans or air conditioning) to comply with installation environment requirements; failure to do so may result in product overheating or fire.

● Unauthorized modification of this product is strictly prohibited!

● When the product is installed inside a cabinet or terminal device, the cabinet or device must be equipped with appropriate protective enclosures, including fireproof, electrical, and mechanical protection. The protection level shall comply with relevant IEC standards

and applicable local laws and regulations.

● When installing equipment that generates strong electromagnetic interference, such as transformers, install shielding protection devices to prevent product malfunction.

● Please install the product on metal or other flame-retardant materials. Do not allow flammable substances to contact or adhere to the product, as this may create a fire hazard.

Attention:

● During installation procedures, cover the top of the product with cloth or paper to prevent metal shavings, oil, water, or other foreign matter from entering the product during drilling, which could cause malfunction. After completing the work, please remove the covering to prevent blockage of ventilation holes, which may impair heat dissipation and cause abnormal heating of the product.

● Resonance may occur when changing the speed of machinery that normally operates at a constant speed. Installing vibration-damping rubber under the motor frame or utilizing the vibration suppression function at this stage can effectively mitigate resonance.

During wiring

Danger:

● Strictly prohibit non-professional personnel from performing equipment installation, wiring, maintenance, inspection, or component replacement!

● Disconnect the power supply to all equipment before wiring. After power is disconnected, residual voltage remains in the internal capacitors of the equipment. Wait at least the duration specified on the product warning label before performing wiring or any other operations. Measure the DC voltage of the main circuit and ensure it is below the safe voltage level; otherwise, there is a risk of electric shock.

● Perform wiring, disassembly of the product cover, or touching of the circuit board only with the power supply disconnected; otherwise, risk of electric shock exists.

● Ensure proper grounding of the equipment and product to prevent the risk of electric shock. Grounding should be performed using isolated grounding or single-point grounding; common grounding is not permitted.

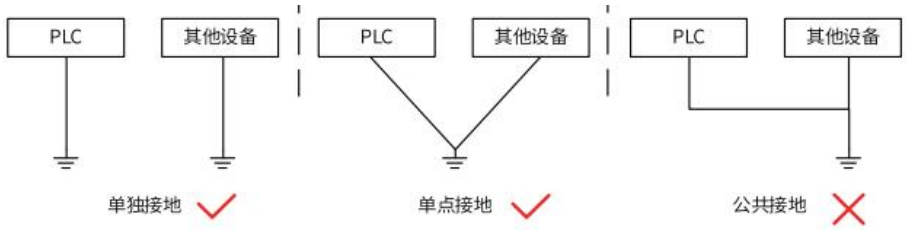

Warning:

● Do not connect the input power supply to the output terminal of the equipment or product, as this can cause equipment damage and may result in fire.

● When connecting the drive equipment to the motor, ensure that the product and motor terminal phase sequences precisely correspond to prevent reverse motor rotation.

● Cables used for wiring must comply with the specified conductor cross-section and shielding requirements. The shielding layer of shielded cables must be reliably grounded at one end only.

● After wiring is completed, ensure all cables are correctly connected and no screws, washers, or exposed wires remain inside the product; otherwise, there is a risk of electric shock or product damage.

Attention:

● Adhere to Electrostatic Discharge (ESD) prevention protocols and wear an anti-static wrist strap during wiring and related operations to prevent damage to the device or internal circuits.

● When wiring control circuits, use double-stranded twisted shielded cables, grounding the shield to the product' s grounding terminal to prevent abnormal product operation.

Power-On

Danger:

● Before powering on, verify that the product is correctly installed, wiring is secure, and the motor device is authorized for restart.

● Before powering on, please verify that the power supply complies with the product specifications to prevent product damage or fire hazards.

● Do not open the product cabinet door or protective cover, touch any wiring terminals,

or disassemble any devices or components of the product while it is energized, as this poses a risk of electric shock.

Warning:

● After the wiring operation and parameter setting are completed, please conduct a test run of the machine to confirm that the machine can operate safely, otherwise it may cause injury to personnel or damage to the equipment.

● Before powering on, make sure that the rated voltage of the product is the same as the power supply voltage. If the power supply voltage is used incorrectly, there is a risk of fire

● Before powering on, make sure that there are no people around the product, motor and machinery, otherwise it may cause injury or death.

Runtime

Danger:

● It is strictly forbidden for non-professionals to operate the product, otherwise there is a risk of injury or death!

● It is strictly forbidden to touch any terminal block of the equipment and disassemble any device or part of the product in the operating state, otherwise there is a risk of electric shock!

Warning:

● It is strictly forbidden to touch the device shell, fan or resistor to test the temperature, otherwise it may cause burns!

● During operation, avoid other items or metal objects falling into the equipment, otherwise it may cause fire or product damage!

Maintenance

Danger:

● Strictly prohibit non-professional personnel from performing equipment installation, wiring, maintenance, inspection, or component replacement!

● It is strictly forbidden to maintain the equipment in the state of power, otherwise there

is a risk of electric shock!

● After cutting off the power to all devices, wait at least for the time specified on the warning label on the product before performing equipment maintenance.

● When using a PM motor, an induced voltage is generated on the motor terminals during motor rotation even if the power to the product is turned off. Do not touch the motor terminals, otherwise there may be a risk of electric shock.

Warning:

● Please conduct daily and regular inspections and maintenance of equipment and products in accordance with equipment maintenance and maintenance requirements, and make maintenance records.

When repairing

Danger:

● Strictly prohibit non-professional personnel from performing equipment installation, wiring, maintenance, inspection, or component replacement!

● It is strictly forbidden to carry out equipment maintenance in the state of power, otherwise there is a risk of electric shock!

● After cutting off the power to all equipment, please wait at least the time specified on the warning label on the product before performing equipment inspection, repair, etc. operations.

Warning:

● Please report the equipment in accordance with the product warranty agreement.

● When a fuse blows, a circuit breaker trips, or a leakage current circuit breaker (ELCB) trips, wait at least for the time specified on the warning label on the product before turning on the power supply or operating the machine, as this may result in casualties and damage to the equipment.

● When the equipment fails or is damaged, professionals must troubleshoot and repair the equipment and products according to the maintenance guidance, and make maintenance records.

● Please follow the product wearing parts replacement instructions for replacement.

● Do not continue to use machines that have already been damaged, as this may result in death or death or greater damage to the product. ● After replacing the equipment, be sure to check the wiring and set the parameters again.
When scrapped
Warning: ● Please scrap equipment and products in accordance with relevant national regulations and standards to avoid property damage or casualties! ● Scrapped equipment and products should be disposed of and recycled in accordance with industrial waste treatment standards to avoid polluting the environment.

■ Safety signage

In order to ensure safe operation, please be sure to abide by the safety signs pasted on the equipment, and do not damage or peel off the safety signs. The safety mark is described below:

Safety signage	Content description
	Please read the safety manual and instructions carefully before using the product, otherwise there is a risk of injury or death or damage to the product!

3 Product information

3.1 Model and nameplate description

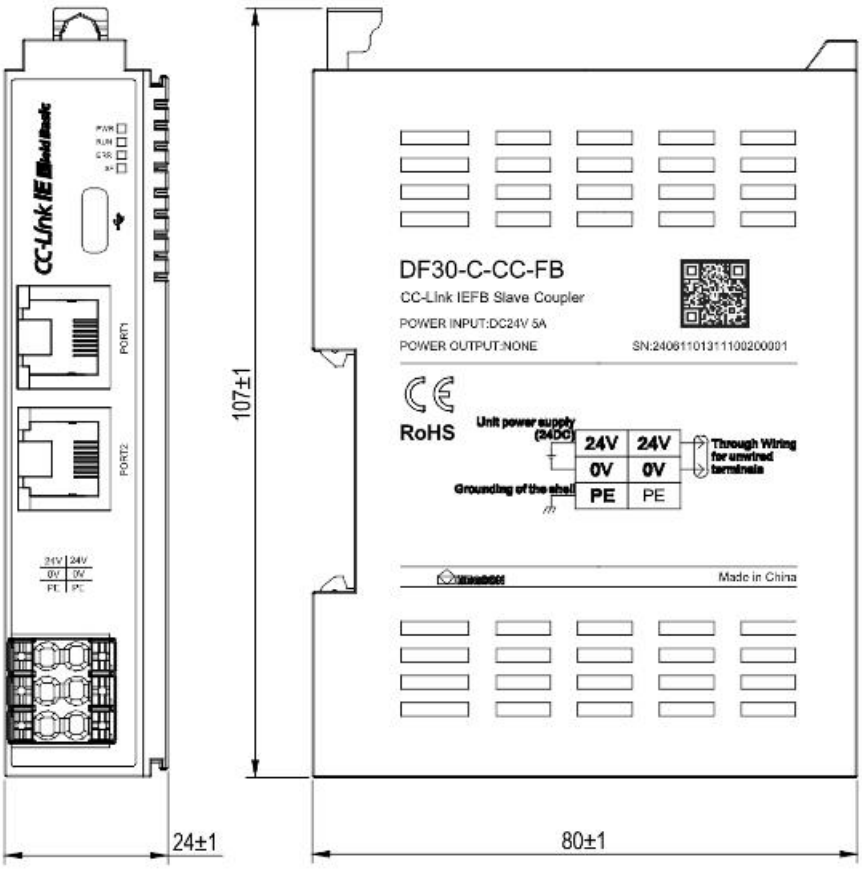

Light				
	LED No	Status and Meaning	LED No	Status and Meaning
	PWR	Green: The system power supply is normal	RUN	Green: It is in a normal communication state
		Green extinguishing: The system power supply is abnormal		Green extinguishing: in the initial state
	ERR	–		

	SF	Red: The device is in forced operation mode (reservation, BootLoad mode, etc.)
		Flashing (red): Configuration error, coupler error, module error, new diagnostic information, etc
		Red extinguishing: The equipment is normal

Terminal blocks	
Interface name	Functional definition
PORT1	CCLINK IEFB interface
PORT2	CCLINK IEFB interface
24V	Module power input terminals
Type-C	Used for single board software upgrade port

Dial switch

- As shown in the figure, the CCLINK IEFB adapter module is equipped with a set of dip switches. There are 8 positions in total, namely position 1, position 2, position 3, position 4, position 5, position 6, position 7, and position 8. Each position represents a value. When pushed to the "ON" position, they represent 1, 2, 4, 8, 16, 32, 64, and 128 respectively. The sum of the values represented by the "ON" positions is the address code of this device.
- For example: Address 11 is calculated as 1 (bit 1) + 2 (bit 2) + 8 (bit 4) = 11. Address 30 is: 2 (bit 2) + 4 (bit 3) + 8 (bit 4) + 16 (bit 5) = 30.
- If all the Dial switch are pulled out, it represents 0
- The Dial switch can be used to set the last byte of the adapter module's IP address, which is the D segment of IP address A:B:C:D. The ABC segments of the IP address can be configured through the "Conf_TestTool_ToMaster" configuration tool. Specifically, when the jumper is set to 0 or 255, the ABCD segments of the adapter's IP address will all adopt the information configured by "Conf_TestTool_ToMaster". When the jumper is set to 254, the adapter's IP address will be fixed as 192.168.3.254. Therefore, in case of IP address loss, forgetting, or other abnormal situations, the jumper can be set to 254, and the 192.168.3.254 address can be used to enter the "Conf_TestTool_ToMaster" configuration to reconfigure the network information of the adapter.
- **When manufactured, the Dial switch will be set to 0 and the IP address will be configured as 192.168.3.2.**

3.2 Specifications

Structural parameters	
Dimensions (WxHxD)	24mm x 104mm x 80mm
Weight	103.4g
Power Parameters	
The terminal input power supply is rated voltage	24V DC (20.4V DC~ 28.8V DC)
The terminal input power supply is rated current	5A (typical at 24V DC)
The USYS backplane outputs the power supply voltage rating	5V DC (4.75V DC～5.25V DC)
The Usys backplane outputs the current rating	2A (typical at 5V)
UIN backplane output power supply rated voltage	24V DC (20.4V DC～ 28.8V DC)
The UIN backplane outputs the power supply current rating	4A (typical at 24V)
功能参数	
Specifications	CCLINK IEFB,2 x RJ45, expandable 32 modules, 24VDC
Communication interface	2 RJ45 interfaces with integrated switch function
Communication protocols	CCLINK IEFB
Communication rate	10/100Mbps, adaptive, full duplex
Bus address settings	PROFINET specification
Address mapping	Yes
Diagnosis	Diagnostic alarm, process alarm, module plugging alarm
Isolation method	Electrical isolation from the site
Transmission medium	Class 5 twisted pairs

Software parameters	
Minimum cycle time	1ms
Wiring parameters	
Connection technology: communication/fieldbus	CCLINK IEFB IO: 2 x RJ-45
Connectivity technology	PUSH-IN type terminal blocks
Connection type	System/field power/input
Crimping area of the wire	0.34～1.5mm²
Stripping length	10mm
Installation method:	DIN-35 type rail
Material parameters	
Color	Pantone 419C
Shell material	PC plastic
Environmental requirements	
Allowable ambient temperature (during operation)	-20～55℃
Allowable ambient temperature (storage)	-40～85℃
Types of protection	IP20
Contamination level	2. Comply with IEC 61131-2 standard
Working altitude	0～2000m
Relative humidity (non-condensing)	5～95%RH
Anti-vibration	1g, in accordance with IEC 60068-2-6 standard
Impact resistance	15g, in accordance with IEC 60068-2-27
EMC anti-interference rating	Zone B, IEC61131-2
Corrosion resistance	Compliant with IEC 60068-2-42 and IEC 60068-2-43 standards

3.3 Wiring schematic

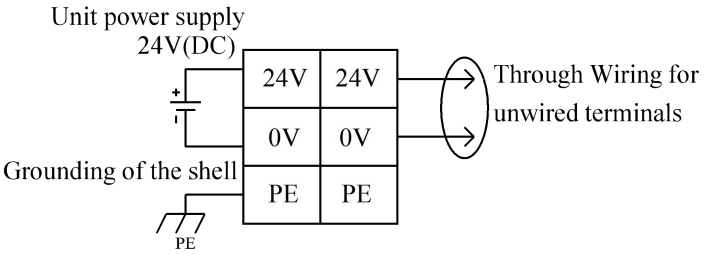

3.4 System block diagram

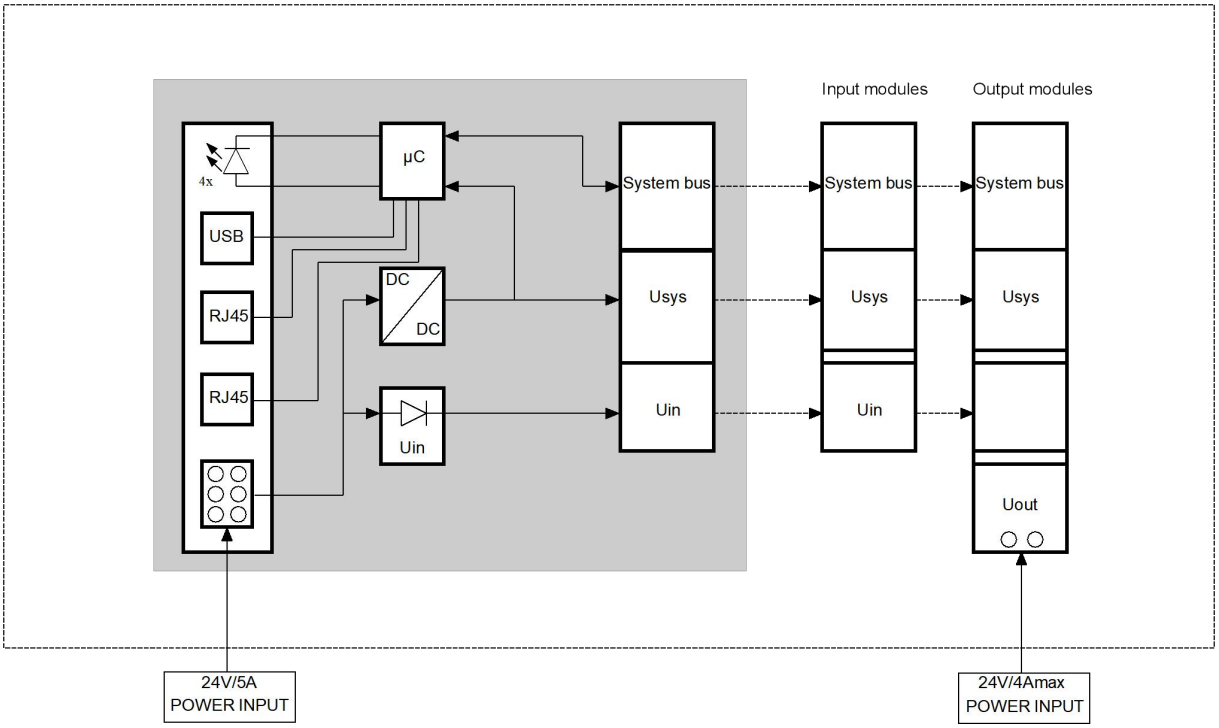

4 Installation and disassembly

4.1 Installation dimensions

➢ The installation dimensions are shown in the following figure, with the unit being millimeters (mm).

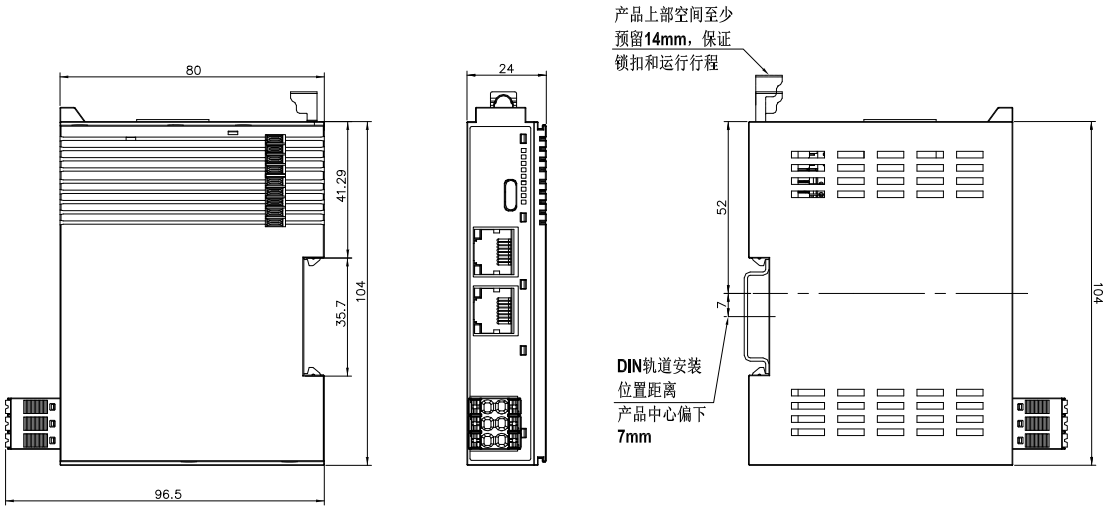

➢ Connection cables

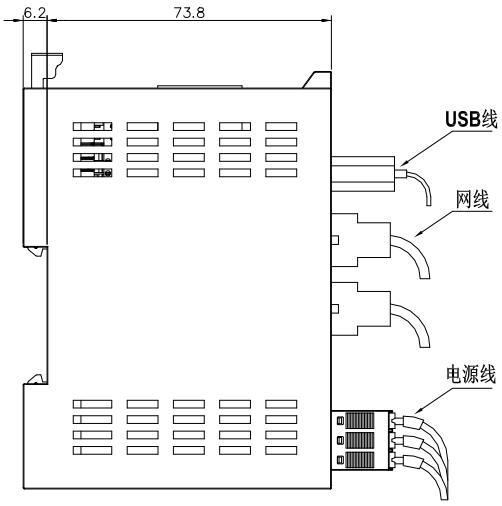

➢ Tail cap

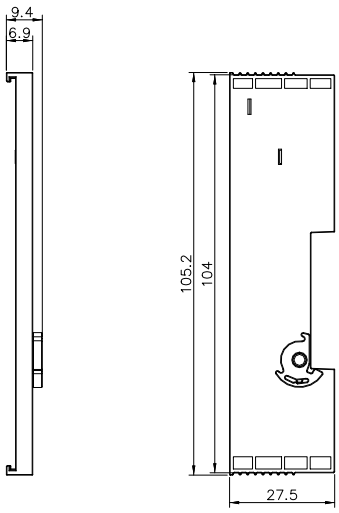

4.2 Installation guide

➢ The inter-module assembly is sliding to install via the top and bottom rails of the module, as shown in the figure below.

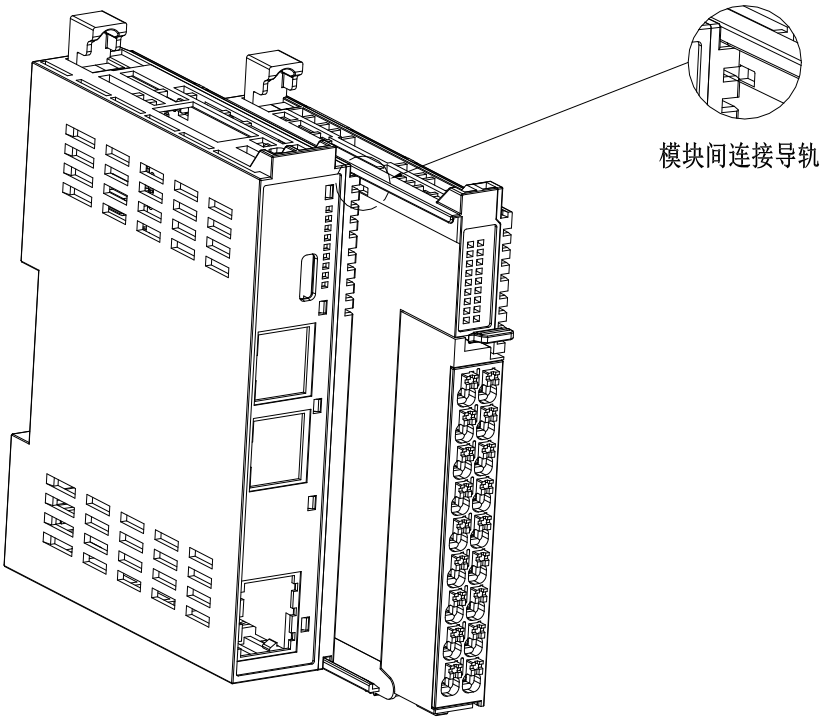

➢ When installing, align the module with the DIN rail, press the module in the direction indicated by the arrow, and there will be a noticeable clamping sound after installation, as shown in the figure below.

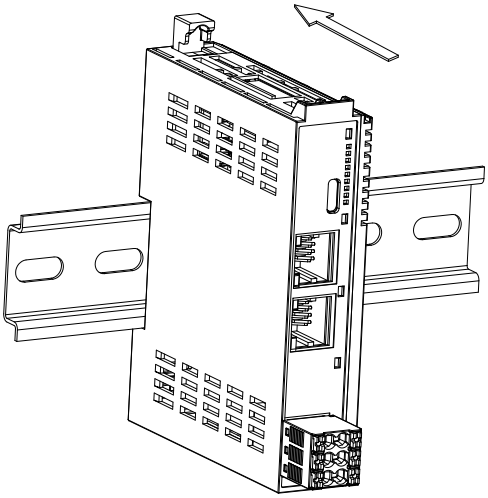

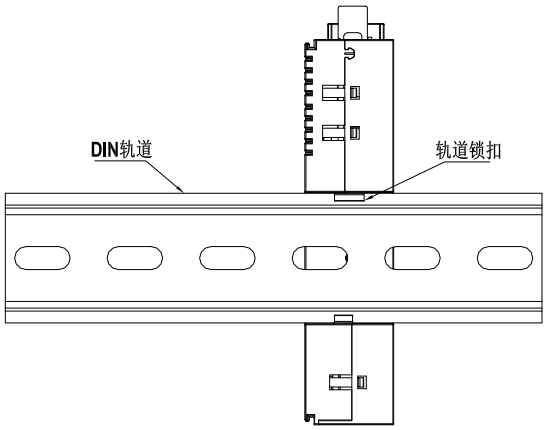

➢ Confirm that the DIN rail lock of the module is locked, and the locking and unlocking status of the rail lock are shown in the figure below.

If the DIN rail latch is below, it is locked.

If the DIN rail latch is on top, it is unlocked.

When unlocked, press down on the DIN rail latch to bring it locked.

➢ The tail cover needs to be installed on the last module to prevent the metal PIN from being exposed, and a DIN rail clip is installed at both ends of the main unit or module to prevent the module from sliding left and right, as shown in the figure below.

➢ When installing the guide rail clip, hook the bottom of the guide rail clip to the bottom of the guide rail and turn the guide rail clip to make the guide rail clip

➢ The upper end hooks the upper end of the rail, and finally the fastening screw locks the guide rail snap.

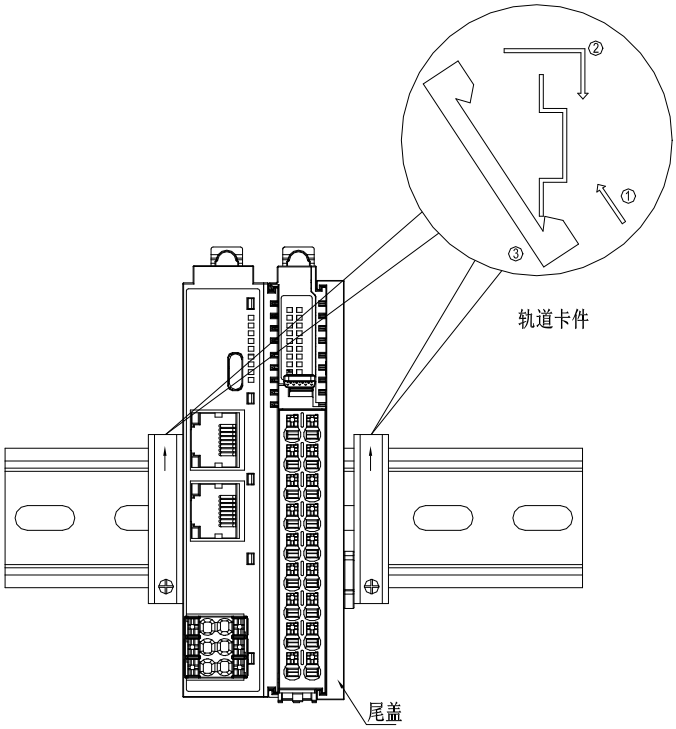

4.3 Disassembly method

➢ Use a flathead screwdriver or similar tool to pry the rail latch upwards, then pull the module away from the DIN rail and press down on the top of the latch when finished.

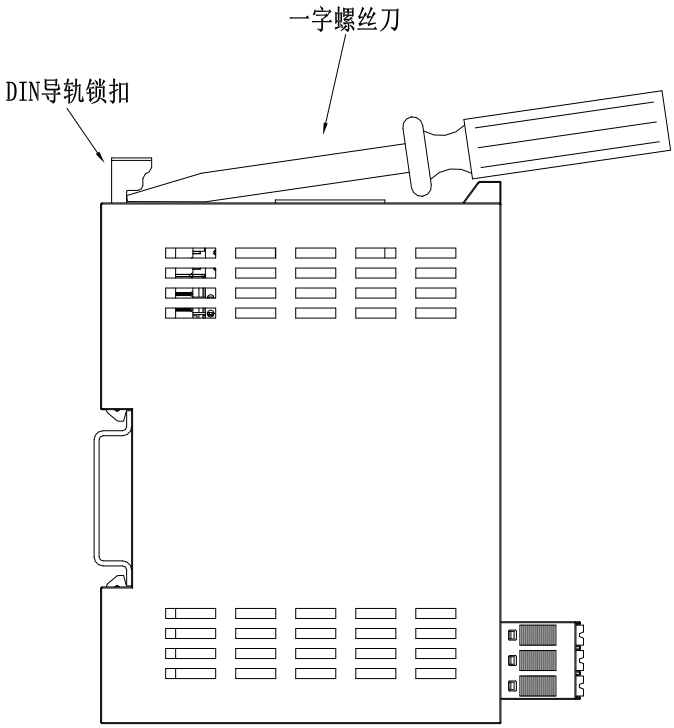

4.4 Notes

- Before installing or disassembling the module, make sure the module is powered off.
- If you encounter a module that is difficult to install, do not use brute force to install it to avoid damaging the current module or other modules. The module should be disassembled from the rail, checked for abnormalities (such as foreign body blockage, etc.), and confirmed that there was no problem before plugging and unplugging.

- If you encounter a module that is difficult to install, do not use brute force to install it to avoid damaging the current module or other modules. The module should be disassembled from the rail, checked for abnormalities (such as foreign body blockage, etc.), and confirmed that there was no problem before plugging and unplugging.

5 Module description

5.1 DF30-M-16DI-P/N

5.1.1 Part description

Light				
	LED No	Status and Meaning	LED No	Status and Meaning
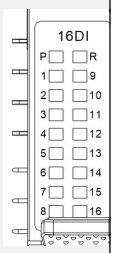	PWR	Green: The system power supply is normal	RUN	Green: The module is running normally
		Green extinguishing: The system power supply is abnormal		Green extinguishing: module hardware failure, communication failure
				Green flashing: Configuration failure/failsafe mode
	LED1-16	Green: Channels 1-16 input signal is valid		
		Green extinguishing: The input signal of channels 1-16 is invalid		

Terminal blocks					
serial number	signal	illustrate	serial number	signal	illustrate
A1	DI 1	The number input channel 1	B1	DI 9	Digital input channel 9
A2	DI 2	Digital input channel 2	B2	DI 10	Digital input channel 10
A3	DI 3	Digital input channel 3	B3	DI 11	Digital input channel 11
A4	DI 4	Digital input channel 4	B4	DI 12	Digital input channel 12
A5	DI 5	The number input channel 5	B5	DI 13	Digital input channel 13
A6	DI 6	Digital input channel 6	B6	DI 14	Digital input channel 14
A7	DI 7	Digital input channel 7	B7	DI 15	Digital input channel 15
A8	DI 8	Digital input channel 8	B8	DI 16	Digital input channel 16
A9	COM	Common pins	B9	COM	Common pins

5.1.2 Specifications

Structural parameters		
Dimensions (WxHxD)		12mm x 100mm x 80mm
Weight		71.5g
Power Parameters		
The rated voltage of the USYS bus input power supply		5V DC +20%/-15% (4.25V DC~ 6V DC)
The USYS bus input power supply is rated current		<50mA (typical at 5V DC)
UOUT power supply input rated voltage		24 V DC +20%/-15% (20.4V DC~28.8V DC)
UOUT power supply input current rating		4A (typical at 24V DC) <50mA (typical at 5V DC)
UOUT power input anti-reverse plug protection		Yes
The module prevents the spread of power failures		Yes
Functional parameters		
Module type		Numeric input
Number of channels		16
Signal type		PNP&NPN
Connection type		1- Wire system
Signal type	"ON" signal voltage	Differential pressure > 11VDC (differential pressure from common input)
	"OFF" signal voltage	Differential pressure < 5VDC (differential pressure from common input)
Input impedance		>7.5kΩ
Hardware response time		100us/100us
Whether to quarantine		Yes
Indicator status		When input is in the drive state, the input

	indicator light is on (software control)
Software parameters	
Data size	2 Byte
Filter time configuration	Supports single-channel independent configuration
Sync mode	Synchronization within the same coupler group is supported
IO mapping	Support bit-by-bit, byte-by-byte, and word-by-word mapping
Wiring parameters	
Connectivity technology	PUSH-IN type terminal blocks
Connection type	System/field power/input
Crimping area of the wire	0.34～1.5mm
Stripping length	10mm
Installation method:	DIN-35 type rail
Material parameters	
Color	Pantone 419C
Shell material	PC plastic
Environmental requirements	
Allowable ambient temperature (during operation)	-20～55℃
Allowable ambient temperature (storage)	-40～85℃
Types of protection	IP20
Contamination level	2.Comply with IEC 61131-2 standard
Working altitude	0～2000m
Relative humidity (non-condensing)	5～95%RH
Anti-vibration	1g, in accordance with IEC 60068-2-6 standard
Impact resistance	15g, in accordance with IEC 60068-2-27

EMC anti-interference rating	Zone B, IEC61131-2
Corrosion resistance	Compliant with IEC 60068-2-42 and IEC 60068-2-43 standards

5.1.3 Wiring diagram

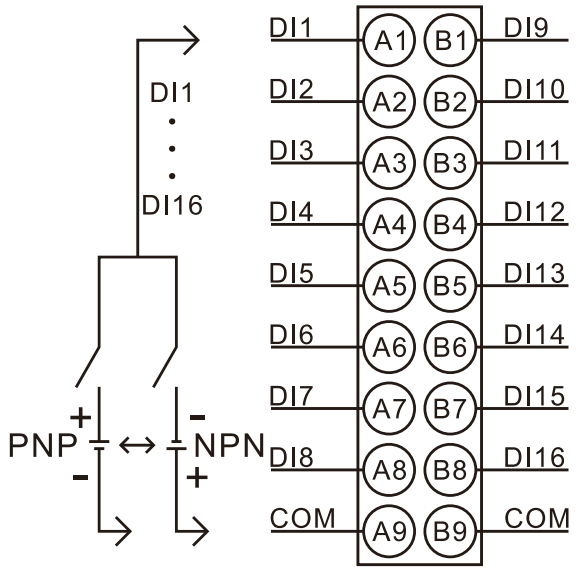

5.2 DF30-M-32DI-P/N

5.2.1Part description

Light				
	LED No	Status and Meaning	LED No	Status and Meaning
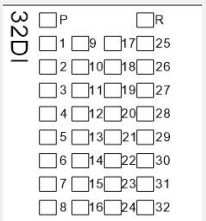	PWR	Green: The system power supply is normal	RUN	Green: The module is running normally
		Green extinguishing: The system power supply		Green extinguishing: module hardware failure, communication failure

		is abnormal		
				Green flashing: Configuration failure/failsafe mode
	LED1-32	Green Light: Channels 1-32 input signal is valid		
		Green extinguishing: The input signal for channels 1-32 is invalid		

Terminal blocks

serial number	signal	illustrate	serial number	signal	illustrate
A1	DI 1	Digital input channel 1	B1	DI 9	Digital input channel 9
A2	DI 2	Digital input channel 2	B2	DI 10	Digital input channel 10
A3	DI 3	Digital input channel 3	B3	DI 11	Digital input channel 11
A4	DI 4	Digital input channel 4	B4	DI 12	Digital input channel 12
A5	DI 5	Digital input channel 5	B5	DI 13	Digital input channel 13
A6	DI 6	Digital input channel 6	B6	DI 14	Digital input channel 14
A7	DI 7	Digital input channel 7	B7	DI 15	Digital input channel 15
A8	DI 8	Digital input channel 8	B8	DI 16	Digital input channel 16
A9	COM1	Common pin 1	B9	COM2	Common pin 2
C1	DI 17	Digital input channel 17	D1	DI 25	Digital input channel 25
C2	DI 18	Digital input channel 18	D2	DI 26	Digital input channel 26
C3	DI 19	Digital input channel 19	D3	DI 27	Digital input channel 27
C4	DI 20	Digital input channel 20	D4	DI 28	Digital input channel 28
C5	DI 21	Digital input channel 21	D5	DI 29	Digital input channel 29
C6	DI 22	Digital input channel 22	D6	DI 30	Digital input channel 30
C7	DI 23	Digital input channel 23	D7	DI 31	Digital input channel 31
C8	DI 24	Digital input channel 24	D8	DI 32	Digital input channel 32
C9	COM3	Common pin 3	D9	COM4	Common pin 4

5.2.2 Specifications

Structural parameters		
Dimensions (WxHxD)		12mm x 100mm x 80mm
Weight		113.6g
Power Parameters		
The rated voltage of the USYS bus input power supply		5V DC +20%/-15% (4.25V DC~ 6V DC)
The USYS bus input power supply is rated current		<50mA (typical at 5V DC)
UOUT power supply input rated voltage		24 V DC +20%/-15% (20.4V DC~28.8V DC)
UOUT power supply input current rating		4A (typical at 24V DC)
UOUT power input anti-reverse plug protection		Yes
The module prevents the spread of power failures		Yes
Functional parameters		
Module type		Numeric input
Number of channels		32
Signal type		PNP&NPN
Connection type		1- Wire system
Signal type	"ON" signal voltage	Differential pressure > 11VDC (differential pressure from common input)
	"OFF" signal voltage	Differential pressure < 5VDC (differential pressure from common input)
Input impedance		>7.5kΩ
Hardware response time		100us/100us

Whether to quarantine	Yes
Indicator status	When the input is valid, the input indicator light is on (software control)
Software parameters	
Data size	4 Byte
Error diagnosis	Communication diagnostics
Filter time configuration	Supports single-channel independent configuration
Sync mode	Synchronization within the same coupler group is supported
IO mapping	Support bit-by-bit, byte-by-byte, and word-by-word mapping
Wiring parameters	
Connection technology: communication/fieldbus	PROFINET IO: 2 x RJ-45
Connectivity technology	PUSH-IN type terminal blocks
Connection type	System/field power/input
Crimping area of the wire	0.34～1.5mm
Stripping length	10mm
Installation method:	
Material parameters	
Color	gy7042
Shell material	PC plastic
Environmental requirements	
Allowable ambient temperature (during operation)	-20～55℃
Allowable ambient temperature (storage)	-40～85℃
Types of protection	IP20
Contamination level	2. Comply with IEC 61131-2 standard
Working altitude	0～2000m

Relative humidity (non-condensing)	5～95%RH
Anti-vibration	1g, in accordance with IEC 60068-2-6 standard
Impact resistance	15g, in accordance with IEC 60068-2-27
EMC anti-interference rating	Zone B, IEC61131-2
Corrosion resistance	Compliant with IEC 60068-2-42 and IEC 60068-2-43 standards

5.2.3 Wiring diagram

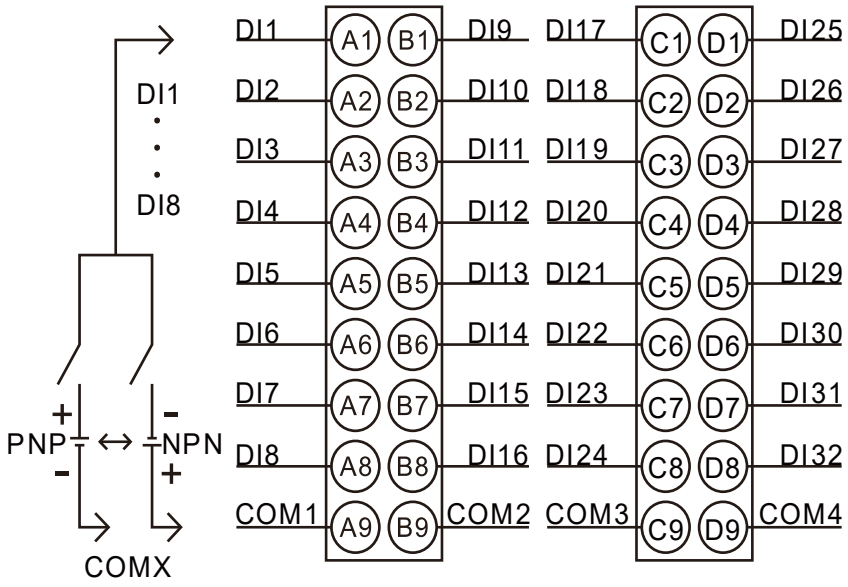

5.3 DF30-M-16DO-N

5.3.1 Part description

Light				
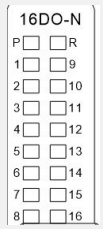	LED No	Status and Meaning	LED No	Status and Meaning
	PWR	Green: The system power supply is normal	RUN	Green: The module is running normally
		Green extinguishing: The		Green extinguishing: module

		system power supply is abnormal		hardware failure, communication failure
				Green flashing: Configuration failure/failsafe mode
	LED1-16	Green: The output signal of channels 1-16 is valid		
		Green extinguishing: The output signal of channels 1-16 is invalid		

Terminal blocks					
serial number	signal	illustrate	serial number	signal	illustrate
A1	DO 1	Digital output channel 1	B1	DO 9	Digital output channel 9
A2	DO 2	Digital output channel 2	B2	DO 10	Digital output channel 10
A3	DO 3	Digital output channel 3	B3	DO 11	Digital output channel 11
A4	DO 4	Digital output channel 4	B4	DO 12	Digital output channel 12
A5	DO 5	Digital output channel 5	B5	DO 13	Digital output channel 13
A6	DO 6	Digital output channel 6	B6	DO 14	Digital output channel 14
A7	DO 7	Digital output channel 7	B7	DO 15	Digital output channel 15
A8	DO 8	Digital output channel 8	B8	DO 16	Digital output channel 16
A9	24V	24V power input	B9	0V	0V input

5.3.2 Specifications

Structural parameters	
Dimensions (WxHxD)	12mm x 100mm x 80mm
weight	71.5g
Power Parameters	
The rated voltage of the USYS bus input power supply	5V DC +20%/-15% (4.25V DC~ 6V DC)
The USYS bus input power supply is rated current	<60mA(5V DC 时典 type 值)
UOUT power supply input rated	24 V DC +20%/-15% (20.4V DC~28.8V DC)

voltage		
UOUT power supply input current rating		4A (typical at 24V DC)
UOUT power input anti-reverse plug protection		Yes
The module prevents the spread of power failures		Yes
Functional parameters		
Module type		Digital output
Number of channels		16
Signal type		NPN
Connection type		1- Wire system
Power supply input Rated voltage	24V	24V power input
	0V	0V input
NPN signal type	"ON" signal voltage	0V DC
	"OFF" signal voltage	High resistance state, leakage current < 0.1mA0V input
Output Load (Resistive Load)		0.5A/point, 4A/module
Output Load (Inductive Load)		7.2W/dot, 24W/module
Output load (light load)		5W/point, 18W/module
Switching frequency		Resistive load 100Hz, inductive load 0.5Hz, lamp load 10Hz
Hardware response time		100us/100us
Output decreasing		Derated by 50% when operating at 55° C (the output current does not exceed 2A when ON) at the same time, or derated by 10° C when the output point is fully ON
Whether to quarantine		Yes
Protection function		Over-temperature shutdown: minimum value 150° C. Typical

	value 175° C Overcurrent protection: 3A Support short-circuit protection
Indicator status	When the output is active, the output indicator light is on (software control)
Software parameters	
Data size	2 Byte
Error diagnosis	Communication diagnostics, power supply diagnostics, channel overcurrent diagnostics
Communication fault output state mode	Maintains current value, outputs to replacement value (configurable)
Overcurrent fault output state mode	Auto Retry, Stop Output (Configurable)
Sync mode	Synchronization within the same coupler group is supported
IO mapping	Support bit-by-bit, byte-by-byte, and word-by-word mapping
Wiring parameters	
Connectivity technology	PUSH-IN type terminal blocks
Connection type	System/field power/input
Crimping area of the wire	0.34～1.5mm
Stripping length	10mm
Installation method:	DIN-35 type rail
Material parameters	
Color	Pantone 419C
Shell material	PC plastic
Environmental requirements	
Allowable ambient temperature (during operation)	-20～55℃
Allowable ambient temperature (storage)	-40～85℃

Types of protection	IP20
Contamination level	2. Comply with IEC 61131-2 standard
Working altitude	0～2000m
Relative humidity (non-condensing)	5～95%RH
Anti-vibration	1g, in accordance with IEC 60068-2-6 standard
Impact resistance	15g, in accordance with IEC 60068-2-27
EMC anti-interference rating	Zone B, IEC61131-2
Corrosion resistance	Compliant with IEC 60068-2-42 and IEC 60068-2-43 standards

5.3.3 Wiring diagram

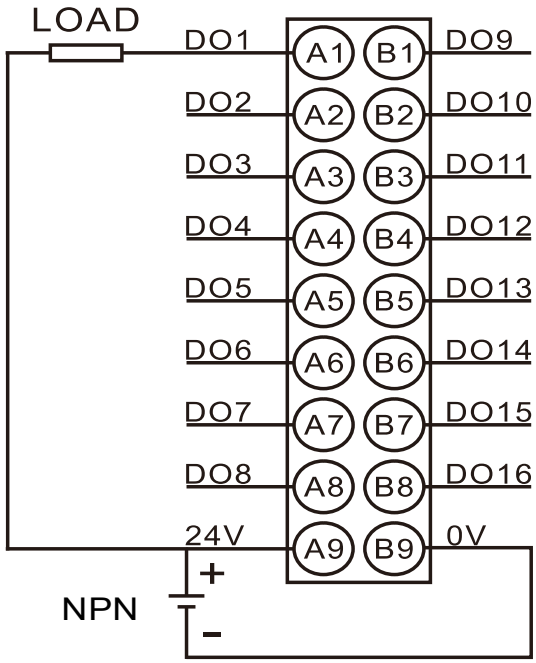

5.4 DF30-M-16DO-P

5.4.1 Part description

16DO-P P□ □R	LED No	Status and Meaning	LED No	Status and Meaning

	PWR	Green: The system power supply is normal	RUN	Green: The module is running normally
		Green extinguishing: The system power supply is abnormal		Green extinguishing: module hardware failure, communication failure
				Green flashing: Configuration failure/failsafe mode
	LED1-16	Green: The output signal of channels 1-16 is valid		
		Green extinguishing: The output signal of channels 1-16 is invalid		

Terminal blocks					
serial number	signal	illustrate	serial number	signal	illustrate
A1	DO 1	Digital output channel 1	B1	DO 9	Digital output channel 9
A2	DO 2	Digital output channel 2	B2	DO 10	Digital output channel 10
A3	DO 3	Digital output channel 3	B3	DO 11	Digital output channel 11
A4	DO 4	Digital output channel 4	B4	DO 12	Digital output channel 12
A5	DO 5	Digital output channel 5	B5	DO 13	Digital output channel 13
A6	DO 6	Digital output channel 6	B6	DO 14	Digital output channel 14
A7	DO 7	Digital output channel 7	B7	DO 15	Digital output channel 15
A8	DO 8	Digital output channel 8	B8	DO 16	Digital output channel 16
A9	24V	24V power input	B9	0V	0V input

5.4.2 Specifications

Structural parameters	
Dimensions (WxHxD)	12mm x 100mm x 80mm
Weight	71.5g
Power Parameters	
The rated voltage of the USYS bus input power supply	5V DC +20%/-15% (4.25V DC~ 6V DC)

The USYS bus input power supply is rated current		<60mA (typical at 5V DC)
UOUT power supply input rated voltage		24 V DC +20%/-15% (20.4V DC~28.8V DC)
UOUT power supply input current rating		4A (typical at 24V DC)
UOUT power input anti-reverse plug protection		Yes
The module prevents the spread of power failures		Yes
Functional parameters		
Module type		Digital output
Number of channels		16
Signal type		PNP
Connection type		1- Wire system
Power supply input Rated voltage	24V	24V power input
	0V	0V input
PNP signal type	"ON" signal voltage	24V DC
	"OFF" signal voltage	High impedance state, leakage current < 0.1mA
Output Load (Resistive Load)		0.5A/point, 4A/module
Output Load (Inductive Load)		7.2W/dot, 24W/module
Output load (light load)		5W/point, 18W/module
Switching frequency		Resistive load 100Hz, inductive load 0.5Hz, lamp load 10Hz
Hardware response time		100us/100us
Output decreasing		Derated by 50% when operating at 55° C (the output current

	does not exceed 2A when ON) at the same time, or derated by 10° C when the output point is fully ON
Whether to quarantine	Yes
Protection function	Thermal shutdown: 175° C typical Overcurrent protection: 1A Support short-circuit protection
Indicator status	When the output is active, the output indicator light is on (software control)
Software parameters	
Data size	2 Byte
Error diagnosis	Communication diagnostics, power supply diagnostics, channel overcurrent diagnostics
Communication fault output state mode	Maintains current value, outputs to replacement value (configurable)
Overcurrent fault output state mode	Auto Retry, Stop Output (Configurable)
Sync mode	Synchronization within the same coupler group is supported
IO mapping	Support bit-by-bit, byte-by-byte, and word-by-word mapping
Wiring parameters	
Connectivity technology	PUSH-IN type terminal blocks
Connection type	System/field power/input
Crimping area of the wire	0.34～1.5mm
stripping length	10mm
Installation method:	DIN-35 type rail
Material parameters	
Color	Pantone 419C
Shell material	PC plastic
Environmental requirements	
Allowable ambient temperature	-20～55℃

(during operation)	
Allowable ambient temperature (storage)	-40～85℃
Types of protection	IP20
Contamination level	2. Comply with IEC 61131-2 standard
Working altitude	0～2000m
Relative humidity (non-condensing)	5～95%RH
Anti-vibration	1g, in accordance with IEC 60068-2-6 standard
Impact resistance	15g, in accordance with IEC 60068-2-27
EMC anti-interference rating	Zone B, IEC61131-2
Corrosion resistance	Compliant with IEC 60068-2-42 and IEC 60068-2-43 standards

5.4.3 Wiring diagram

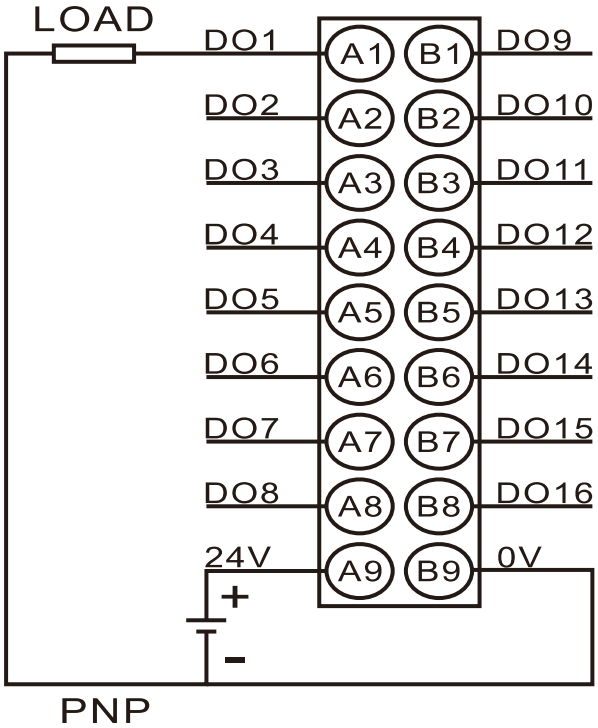

5.5 DF30-M-32DO-P

5.5.1 Part description

Light

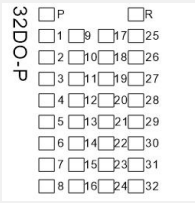

LED No	Status and Meaning	LED No	Status and Meaning
PWR	Green: The system power supply is normal	RUN	Green: The module is running normally
	Green extinguishing: The system power supply is abnormal		Green extinguishing: module hardware failure, communication failure
			Green flashing: Configuration failure/failsafe mode
LED1-32	Green: The output signal of channels 1-32 is valid		
	Green extinguishing: The output signal of channels 1-32 is invalid		

Terminal blocks					
serial number	signal	illustrate	Serial number	signal	illustrate
A1	DO 1	Digital output channel 1	B1	DO 9	Digital output channel 9
A2	DO 2	Digital output channel 2	B2	DO 10	Digital output channel 10
A3	DO 3	Digital output channel 3	B3	DO 11	Digital output channel 11
A4	DO 4	Digital output channel 4	B4	DO 12	Digital output channel 12
A5	DO 5	Digital output channel 5	B5	DO 13	Digital output channel 13
A6	DO 6	Digital output channel 6	B6	DO 14	Digital output channel 14
A7	DO 7	Digital output channel 7	B7	DO 15	Digital output channel 15

A8	DO 8	Digital output channel 8	B8	DO 16	Digital output channel 16
A9	24V	24V power input	B9	0V	0V input
C1	DO 17	Digital output channel 17	D1	DO 25	Digital output channel 25
C2	DO 18	Digital output channel 18	D2	DO 26	Digital output channel 26
C3	DO 19	Digital output channel 19	D3	DO 27	Digital output channel 27
C4	DO 20	Digital output channel 20	D4	DO 28	Digital output channel 28
C5	DO 21	Digital output channel 21	D5	DO 29	Digital output channel 29
C6	DO 22	Digital output channel 22	D6	DO 30	Digital output channel 30
C7	DO 23	Digital output channel 23	D7	DO 31	Digital output channel 31
C8	DO 24	Digital output channel 24	D8	DO 32	Digital output channel 32
C9	24V	24V power input	D9	0V	0V input

5.5.2 Specifications

Structural parameters	
Dimensions (WxHxD)	12mm x 100mm x 80mm
Weight	113.6g
Power Parameters	
The rated voltage of the USYS bus input power supply	5V DC +20%/-15% (4.25V DC~ 6V DC)
The USYS bus input power supply	<60mA (typical at 5V DC)

is rated current		
UOUT power supply input rated voltage		24 V DC +20%/-15% (20.4V DC~28.8V DC)
UOUT power supply input current rating		4A (typical at 24V DC)
UOUT power input anti-reverse plug protection		Yes
The module prevents the spread of power failures		Yes
Functional parameters		
Module type		Digital output
Number of channels		32
Signal type		PNP
Connection type		1- Wire system
Power supply input Rated voltage	24V	24V power input
	0V	0V input
PNP signal type	"ON" signal voltage	24V DC
	"OFF" signal voltage	High configuration, leakage current < 0.1mA
Output Load (Resistive Load)		0.5A/point, 8A/module
Output Load (Inductive Load)		7.2W/dot, 48W/module
Output load (light load)		5W/dot, 36W/module
Switching frequency		Resistive load 100Hz, inductive load 0.5Hz, lamp load 10Hz
Hardware response time		100us/100us
Output decreasing		Derating by 50% when operating at 55° C (the output current does not exceed 4A when turned on at the same

	time), or derating by 10° C when the output point is fully ON
Whether to quarantine	Yes
Protection function	Thermal shutdown: 175° C typical Overcurrent protection: 1A Support short-circuit protection
Indicator status	When the output is active, the output indicator light is on (software control)
Software parameters	
Data size	4 Byte
Error diagnosis	Communication diagnostics, power supply diagnostics, channel overcurrent diagnostics
Communication fault output state mode	Keep the current value and output as the replacement value
Overcurrent fault output state mode	Auto Retry, Stop Output (Configurable)
Sync mode	Synchronization within the same coupler group is supported
IO mapping	Support bit-by-bit, byte-by-byte, and word-by-word mapping
Wiring parameters	
Connection technology: communication/fieldbus	PROFINET IO: 2 x RJ-45
Connectivity technology	PUSH-IN type terminal blocks
Connection type	System/field power/input
Crimping area of the wire	0.34～1.5mm
Stripping length	10mm
Installation method:	DIN-35 type rail
Material parameters	

Color	gy7042
Shell material	PC plastic
Environmental requirements	
Allowable ambient temperature (during operation)	-20～55℃
Allowable ambient temperature (storage)	-40～85℃
Types of protection	IP20
Contamination level	2. Comply with IEC 61131-2 standard
Working altitude	0～2000m
Relative humidity (non-condensing)	5～95%RH
Anti-vibration	1g, in accordance with IEC 60068-2-6 standard
Impact resistance	15g, in accordance with IEC 60068-2-27
EMC anti-interference rating	Zone B, IEC61131-2
Corrosion resistance	Compliant with IEC 60068-2-42 and IEC 60068-2-43 standards

5.5.3 Wiring diagram

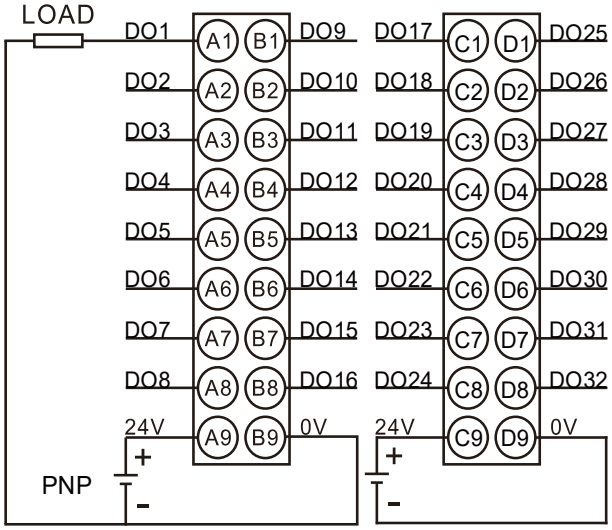

5.6 DF30-M-32DO-N

5.6.1 Part description

Light				
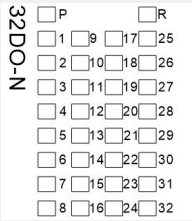	LED No	Status and Meaning	LED No	Status and Meaning
	PWR	Green: The system power supply is normal	RUN	Green: The module is running normally
		Green extinguishing: The system power supply is abnormal		Green extinguishing: module hardware failure, communication failure
				Green flashing: Configuration failure/failsafe mode
	LED1-32	Green: The output signal of channels 1-32 is valid		
		Green extinguishing: The output signal of channels 1-32 is invalid		

Terminal blocks					
serial number	signal	illustrate	serial number	signal	illustrate
A1	DO 1	Digital output channel 1	B1	DO 9	Digital output channel 9
A2	DO 2	Digital output channel 2	B2	DO 10	Digital output channel 10
A3	DO 3	Digital output channel 3	B3	DO 11	Digital output channel 11
A4	DO 4	Digital output channel 4	B4	DO 12	Digital output channel 12
A5	DO 5	Digital output channel 5	B5	DO 13	Digital output channel 13
A6	DO 6	Digital output channel 6	B6	DO 14	Digital output channel 14
A7	DO 7	Digital output channel 7	B7	DO 15	Digital output channel 15
A8	DO 8	Digital output channel 8	B8	DO 16	Digital output channel 16
A9	24V	24V power input	B9	0V	0V input
C1	DO 17	Digital output channel 17	D1	DO 25	Digital output channel 25
C2	DO 18	Digital output channel 18	D2	DO 26	Digital output channel 26
C3	DO 19	Digital output channel 19	D3	DO 27	Digital output channel 27

C4	DO 20	Digital output channel 20	D4	DO 28	Digital output channel 28
C5	DO 21	Digital output channel 21	D5	DO 29	Digital output channel 29
C6	DO 22	Digital output channel 22	D6	DO 30	Digital output channel 30
C7	DO 23	Digital output channel 23	D7	DO 31	Digital output channel 31
C8	DO 24	Digital output channel 24	D8	DO 32	Digital output channel 32
C9	24V	24V power input	D9	0V	0V input

5.6.2 Specifications

Structural parameters	
Dimensions (WxHxD)	12mm x 100mm x 80mm
Weight	113.6g
Power Parameters	
The rated voltage of the USYS bus input power supply	5V DC +20%/-15% (4.25V DC~ 6V DC)
The USYS bus input power supply is rated current	<60mA (typical at 5V DC)
UOUT power supply input rated voltage	24 V DC +20%/-15% (20.4V DC~28.8V DC)
UOUT power supply input current rating	4A (typical at 24V DC)
UOUT power input anti-reverse plug protection	Yes
The module prevents the spread of power failures	Yes
Functional parameters	
Module type	Digital output
Number of channels	32
Signal type	NPN
Connection type	1- Wire system

Power supply input Rated voltage	24V	24V power input
	0V	0V input
NPN signal type	"ON" signal voltage	24V DC
	"OFF" signal voltage	High configuration, leakage current < 0.1mA
Output Load (Resistive Load)		0.5A/point, 8A/module
Output Load (Inductive Load)		7.2W/dot, 48W/module
Output load (light load)		5W/dot, 36W/module
Switching frequency		Resistive load 100Hz, inductive load 0.5Hz, lamp load 10Hz
Hardware response time		100us/100us
Output decreasing		Derating by 50% when operating at 55° C (the output current does not exceed 4A when turned on at the same time), or derating by 10° C when the output point is fully ON
Whether to quarantine		Yes
Protection function		Over-temperature shutdown: minimum value 150° C. Typical value 175° C Overcurrent protection: 3A Support short-circuit protection
Indicator status		When the output is active, the output indicator light is on (software control)
Software parameters		
Data size		4 Byte
Error diagnosis		Communication diagnostics, power supply diagnostics, channel overcurrent diagnostics
Communication fault output		Keep the current value and output as the replacement

state mode	value
Overcurrent fault output state mode	Automatic retries
Sync mode	Synchronization within the same coupler group is supported
IO mapping	Support bit-by-bit, byte-by-byte, and word-by-word mapping
Wiring parameters	
Connection technology: communication/fieldbus	PROFINET IO: 2 x RJ-45
Connectivity technology	PUSH-IN type terminal blocks
Connection type	System/field power/input
Crimping area of the wire	0.34～1.5mm
stripping length	10mm
Installation method:	DIN-35 type rail
Material parameters	
Color	gy7042
Shell material	PC plastic
Environmental requirements	
Allowable ambient temperature (during operation)	-20～55℃
Allowable ambient temperature (storage)	-40～85℃
Types of protection	IP20
Contamination level	2. Comply with IEC 61131-2 standard
Working altitude	0～2000m
Relative humidity (non-condensing)	5～95%RH
Anti-vibration	1g, in accordance with IEC 60068-2-6 standard

Impact resistance	15g, in accordance with IEC 60068-2-27
EMC anti-interference rating	Zone B, IEC61131-2
Corrosion resistance	Compliant with IEC 60068-2-42 and IEC 60068-2-43 standards

5.6.3 Wiring diagram

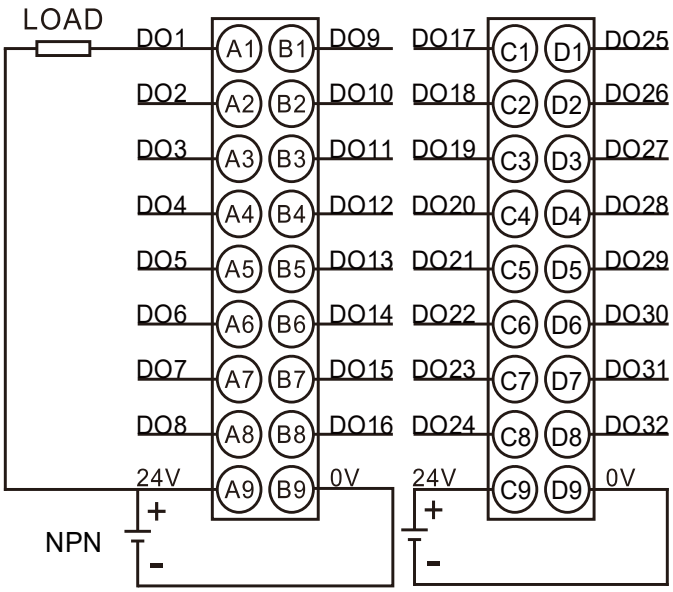

5.7 DF30-M-4AI-UI

5.7.1 Part description

Light				
	LED No	Status and Meaning	LED No	Status and Meaning
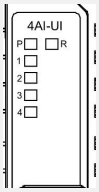	PWR	Green: The system power supply is normal	RUN	Green: The module is running normally
		Green extinguishing: The system power supply is abnormal		Green extinguishing: module hardware failure, communication failure
				Green flashing: Configuration failure/failsafe mode

	LED1-4	Green: Channels 1-4 input signal is valid
		Green extinguishing: The input signal of channels 1-4 is invalid
		Green flashing: When the diagnostic switch for channels 1-4 is turned on, the corresponding input channel fault is affected

Terminals					
serial number	signal	illustrate	serial number	signal	illustrate
A1	U1+	Analog voltage input channel 1	B1	U1-	Analog voltage input channel 1
A2	U2+	Analog voltage input channel 2	B2	U2-	Analog voltage input channel 2
A3	U3+	Analog voltage input channel 3	B3	U3-	Analog voltage input channel 3
A4	U4+	Analog voltage input channel 4	B4	U4-	Analog voltage input channel 4
A5	I1+	Analog current input channel 1	B5	I1-	Analog current input channel 1
A6	I2+	Analog current input channel 2	B6	I2-	Analog current input channel 2
A7	I3+	Analog current input channel 3	B7	I3-	Analog current input channel 3
A8	I4+	Analog current input channel 4	B8	I4-	Analog current input channel 4
A9	24V	24V power output	B9	0V	0V output

5.7.2 Specifications

Structural parameters	
Dimensions (WxHxD)	12mm x 100mm x 80mm
Weight	71.5g

Power Parameters:	
The rated voltage of the USYS bus input power supply	5V DC +20%/-15% (4.25V DC~ 6V DC)
The USYS bus input power supply is rated current	<50mA
UIN power supply input rated voltage	24 V DC (20.4V DC~28.8V DC)
UIN power supply input current rating	<50mA non-distribution
	<250mA power distribution
UIN power input anti-reverse plug protection	Yes
Functional parameters	
Module type	Analog voltage and current input module
Number of channels	4
signaltype	Voltage/current
Connection type	2-wire power distribution, 4-wire non-power distribution
Channel mode configuration	Disable, 0~10mA、0~20mA、4~20mA、±10V、0~10V、2~10V、±5V、0~5V、1~5V
Voltage input accuracy	±0.1% (± 10V full scale)
Voltage input impedance	＞400KΩ
Voltage input limit	±15V
Voltage input diagnostics	Over-limit detection, 2~10V, 1~5V support disconnection detection
Current sampling impedance	≤250Ω
Current input accuracy	±0.1% (20mA full scale)
Current input limit	30mA
Current input diagnostics	Over-limit detection, 4~20mA supports disconnection detection
Whether to quarantine	The interface channels are not isolated, and the interface

	is isolated from the bus
Input action display	When the input signal is valid, the input channel indicator light is solid (software control)
Software parameters	
Sampling period	1ms (4 channels)
Filtering method	Sliding window filtering, debounce filtering, 50HZ/60HZ anti-power frequency
Data size	8 Byte
Error diagnosis	Communication diagnosis, power supply diagnosis, channel overrun diagnosis, channel disconnection diagnosis
IO MAPPING	Word-by-word mapping is supported
Wiring parameters	
Connectivity technology	PUSH-IN type terminals
Connection type	System/field power/input
Crimping area of the wire	0.34～1.5mm
stripping length	10mm
Installation method:	DIN-35 type rail
Material parameters	
Color	Pantone 419C
Shell material	PC plastic
Environmental requirements	
Allowable ambient temperature (during operation)	-20～55℃
Allowable ambient temperature (storage)	-40～85℃
Types of protection	IP20
Contamination level	2. Comply with IEC 61131-2 standard
Working altitude	0～2000m

Relative humidity (non-condensing)	5～95%RH
Anti-vibration	1g, in accordance with IEC 60068-2-6 standard
Impact resistance	15g, in accordance with IEC 60068-2-27
EMC anti-interference rating	Zone B, IEC61131-2
Corrosion resistance	Compliant with IEC 60068-2-42 and IEC 60068-2-43 standards

5.7.3 Wiring diagram

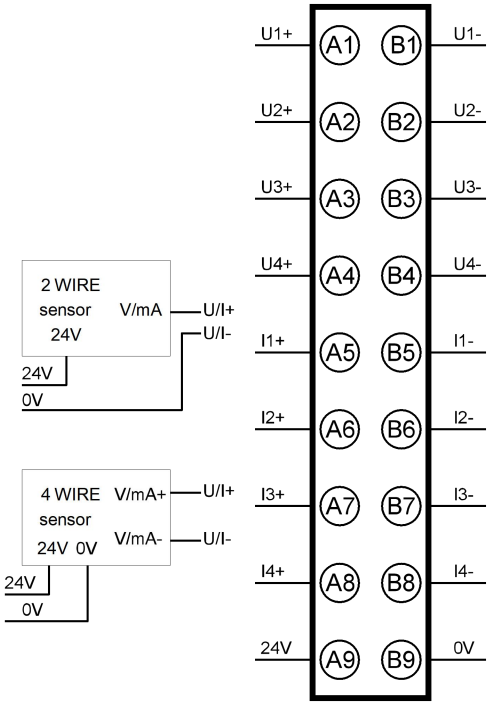

Concentrate:

➢ If the sensor enumeration item in channel 1 is configured as 0~10mA ~ 4~20mA, then channel 1 is the current detection mode, and the sensor is connected to the A5 ~ B5 channel; If the sensor enumeration item in channel 1 is configured as -10V~+10V ~ 1V~5V, then channel 1 is in voltage detection mode, and the sensor is connected to channel A1 ~ B1;

➢ If the sensor enumeration in channel 2 is configured as 0~10mA ~ 4~20mA, channel 2 is the current detection mode, and the sensor is connected to the A6 ~ B6 channel; If the sensor enumeration on channel 2 is configured as -10V~+10V ~ 1V~5V, then channel 2 is in voltage detection mode, the sensor is connected to channel A2 ~ B2, and so on for other

channels.

5.8 DF30-M-4AO-UI

5.8.1 Part description

指示灯				
	LED No	Status and Meaning	LED No	Status and Meaning
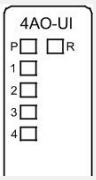	PWR	Green: The system power supply is normal	RUN	Green: The module is running normally
		Green extinguishing: The system power supply is abnormal		Green extinguishing: module hardware failure, communication failure
				Green flashing: Configuration failure/failsafe mode
	LED1-4	Green light: Channels 1-4 output signal is valid		
		Green extinction: The output signal of channels 1-4 is invalid		

Terminals					
Serial number	signal	illustrate	Serial number	signal	illustrate
A1	U1+	Analog voltage output channel 1	B1	U1-	Analog voltage output channel 1
A2	U2+	Analog voltage output channel 2	B2	U2-	Analog voltage output channel 2
A3	U3+	Analog voltage output channel 3	B3	U3-	Analog voltage output channel 3
A4	U4+	Analog voltage output channel 4	B4	U4-	Analog voltage output channel 4
A5	I1+	Analog current output channel 1	B5	I1-	Analog current output channel 1

A6	I2+	Analog current output channel 2	B6	I2-	Analog current output channel2
A7	I3+	Analog current output channel 3	B7	I3-	Analog current output channel3
A8	I4+	Analog current output channel4	B8	I4-	Analog current output channel4
A9	24V	24V power input	B9	0V	0V input

5.8.2 Specifications

Structural parameters	
Dimensions (WxHxD)	12mm x 100mm x 80mm
Weight	71.5g
Power Parameters	
The rated voltage of the USYS bus input power supply	5V DC +20%/-15% (4.25V DC~ 6V DC)
The USYS bus input power supply is rated current	<50mA (typical at 5V DC)
UOUT power supply input rated voltage	24 V DC +20%/-15% (20.4V DC~28.8V DC)
UOUT power supply input current rating	<200mA
UOUT power input anti-reverse plug protection	Yes
Functional parameters	
Module type	Analog voltage current output
Number of channels	4
signaltype	Voltage/current
Connection type	2-wire power distribution, 4-wire non-power distribution

Voltage output range	±10V、0~10V、2~10V、±5V、0~5V、1~5V
Voltage output load	＞1kΩ
Voltage output accuracy	±0.1%
Current output range	0~10mA、0~20mA、4~20mA
current output load	0~10mA：<1.5kΩ other：<600Ω
Current output accuracy	±0.1%
Whether to quarantine	The interface channels are not isolated, the power supply is isolated from the interface, and the interface is isolated from the bus
Output action display	When the output is active, the output indicator light is on (software control)
Software parameters	
Convert the range of digital quantities	-20000~20000, -32000~32000, -27648~27648
IO process data size	16byte
Error diagnosis	Communication diagnostics, power supply diagnostics, output open circuits (effective when current is output)
Sync mode	Synchronization within the same coupler group is supported
IO mapping	Word-by-word mapping is supported
Wiring parameters	
Connectivity technology	PUSH-IN type terminals
Connection type	System/field power/input
Crimping area of the wire	0.34～1.5mm
Stripping length	10mm
Installation method:	DIN-35 type rail
Material parameters	
Color	Pantone 419C
Shell material	PC plastic

Environmental requirements	
Allowable ambient temperature (during operation)	-20～55℃
Allowable ambient temperature (storage)	-40～85℃
Types of protection	IP20
Contamination level	2. Comply with IEC 61131-2 standard
Working altitude	0～2000m
Relative humidity (non-condensing)	5～95%RH
Anti-vibration	1g, in accordance with IEC 60068-2-6 standard
Impact resistance	15g, in accordance with IEC 60068-2-27
EMC anti-interference rating	Zone B, IEC61131-2
Corrosion resistance	Compliant with IEC 60068-2-42 and IEC 60068-2-43 standards

5.8.3 Wiring diagram

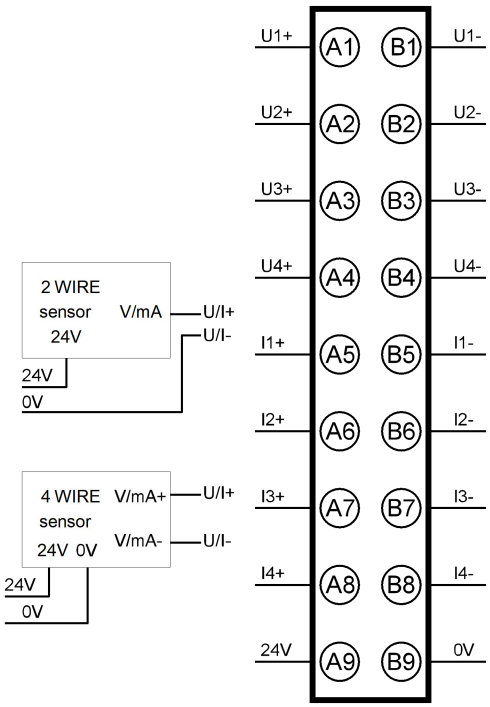

5.9 DF30-M-8AI-I

5.9.1 Part description

Light				
	LED No	Status and Meaning	LED No	Status and Meaning
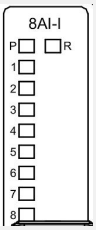	PWR	Green: The system power supply is normal	RUN	Green: The module is running normally
		Green extinguishing: The system power supply is abnormal		Green extinguishing: module hardware failure, communication failure
				Green flashing: Configuration failure/failsafe mode
	LED1-8	Green: Channels 1-8 input signal valid		
		Green extinguished: The signal input for channels 1-8 is invalid		
		Green flashing: When the diagnostic switch on channels 1-8 is on, the corresponding input channel is faulty		

Terminals					
Serial number	signal	illustrate	Serial number	signal	illustrate
A1	I1+	Current input channel1	B1	I1-	Current input channel1
A2	I2+	Current input channel2	B2	I2-	Current input channel2
A3	I3+	Current input channel3	B3	I3-	Current input channel3
A4	I4+	Current input channel4	B4	I4-	Current input channel4
A5	I5+	Current input channel5	B5	I5-	Current input channel5
A6	I6+	Current input channel6	B6	I6-	Current input channel6
A7	I7+	Current input channel7	B7	I7-	Current input channel7
A8	I8+	Current input channel8	B8	I8-	Current input channel8
A9	24V	24V power output	B9	0V	0V output

5.9.2 Specifications

Structural parameters	
Dimensions (WxHxD)	12mm x 100mm x 80mm
Weight	71.5g
Power Parameters	
The rated voltage of the USYS bus input power supply	5V DC +20%/-15% (4.25V DC~ 6V DC)
The USYS bus input power supply is rated current	<50mA
UIN power supply input rated voltage	24 V DC (20.4V DC~28.8V DC)
UIN power supply input current rating	<50mA non-distribution
	< 250mA power distribution
UIN power input anti-reverse plug protection	Yes
The module prevents the spread of power failures	Yes
Functional parameters	
Module type	Analog input module
Number of channels	8
Signal type	current
Connection type	2-wire power distribution, 4-wire non-power distribution
Maximum input range of current	0~10mA: 0~12.5mA 0~20mA: 0~24mA 4~20mA: 1.19~24mA
Current harvesting impedance	≤250Ω
Current input accuracy	±0.1% (full scale)
Drift	±50ppm/K

Current protection	30mA
Current input diagnostics	Over-limit detection, 4~20mAYes disconnection detection
Whether to quarantine	The interface channels are not isolated, the power supply is isolated from the interface, and the interface is isolated from the bus
Independent channel enable configuration	Yes
Diagnose and report feature configurations	Yes
Channel mode configuration	Disable, 0~10mA, 0~20mA, 4~20mA
Input action display	When the input signal is valid, the input indicator light is solid
Channel reverse polarity protection	Yes
The channel is anti-24V misconnected	Yes
Software parameters	
Sampling period	1.6ms (8 channels)
Filtering method	Sliding window filtering, debounce filtering, 50HZ/60HZ anti-power frequency
Data size	16 Byte
Error diagnosis	Communication diagnosis, power supply diagnosis, channel overrun diagnosis, channel disconnection diagnosis
IO mapping	Word-by-word mapping is supported
Wiring parameters	
Connectivity technology	PUSH-IN type terminals
Connection type	System/field power/input
Crimping area of the wire	0.34～1.5mm
Stripping length	10mm

Installation method:	DIN-35 type rail
Material parameters	
Color	Pantone 419C
Shell material	PC plastic
Environmental requirements	
Allowable ambient temperature (during operation)	-20～55℃
Allowable ambient temperature (storage)	-40～85℃
Types of protection	IP20
Contamination level	2. Comply with IEC 61131-2 standard
Working altitude	0～2000m
Relative humidity (non-condensing)	5～95%RH
Anti-vibration	1g, in accordance with IEC 60068-2-6 standard
Impact resistance	15g, in accordance with IEC 60068-2-27
EMC anti-interference rating	Zone B, IEC61131-2
Corrosion resistance	Compliant with IEC 60068-2-42 and IEC 60068-2-43 standards

5.9.3 Wiring diagram

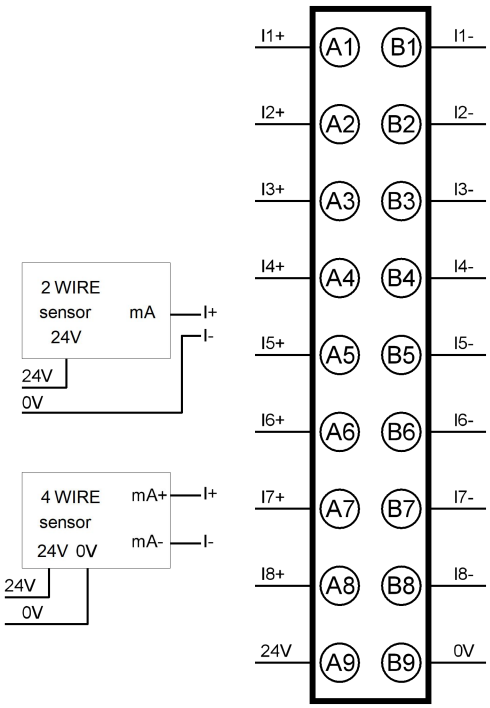

5.10 DF30-M-8AO-I

5.10.1 Part description

Light				
	LED No	Status and Meaning	LED No	Status and Meaning
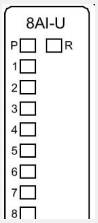	PWR	Green: The system power supply is normal	RUN	Green: The module is running normally
		Green extinguishing: The system power supply is abnormal		Green extinguishing: module hardware failure, communication failure
				Green flashing: Configuration failure/failsafe mode
	LED1-8	Green light: Channels 1-8 output signal is valid		
		Green extinguishing: Channels 1-8 output signal abnormal		

Terminals					
Serial number	signal	illustrate	Serial number	signal	illustrate

A1	I1+	Current output channel1	B1	I1-	Current output channel1
A2	I2+	Current output channel2	B2	I2-	Current output channel2
A3	I3+	Current output channel3	B3	I3-	Current output channel3
A4	I4+	Current output channel4	B4	I4-	Current output channel4
A5	I5+	Current output channel5	B5	I5-	Current output channel5
A6	I6+	Current output channel6	B6	I6-	Current output channel6
A7	I7+	Current output channel7	B7	I7-	Current output channel7
A8	I8+	Current output channel8	B8	I8-	Current output channel8
A9	24V	24V power input	B9	0V	0V input

5.10.2 Specifications

Structural parameters	
Dimensions (WxHxD)	12mm x 100mm x 80mm
Weight	71.5g
Power Parameters	
The rated voltage of the USYS bus input power supply	5V DC +20%/-15% (4.25V DC~ 6V DC)
The USYS bus input power supply is rated current	<50mA (typical at 5V DC)
UOUT power supply input rated voltage	24 V DC +20%/-15% (20.4V DC~28.8V DC)
UOUT power supply input current rating	＜200mA
UOUT power input anti-reverse plug protection	Yes
Functional parameters	
Module type	Analog output
Number of channels	8

signaltype	current
Current output range	0~10ma: 0~12.5ma 0~20ma: 0~24ma 4~20ma: 1.19~24ma
Current output load	0~10ma: <1.5kΩ other: <600Ω
Current output accuracy	±0.1% (full scale)
Channel mode configuration	Disable, 0~10ma, 0~20ma, 4~20ma
Whether to quarantine	The interface channel is not isolated, the interface is isolated from the bus, 500VAC
Drift	±50ppm/k
Output response time	10%~90% 阶跃: <100ms
Diagnostic tests	Communication diagnosis, power supply diagnosis, output open circuit
Output status configuration after shutdown	Keep the current output or output preset
Stop mode	Press the faildown state mode and no longer refresh
Output action display	When the output signal is valid, the indicator light is always on
Software parameters	
Convert the range of digital quantities	0~20000, 0~32000, 0~27648
IO process data size	16byte
Error diagnosis	Communication diagnosis, power supply diagnosis, output open circuit
Sync mode	Synchronization within the same coupler group is supported
IO mapping	Word-by-word mapping is supported
Wiring parameters	
Connectivity technology	PUSH-IN type terminals

Connection type	System/field power/input
Crimping area of the wire	0.34～1.5mm
Stripping length	10mm
Installation method:	DIN-35 type rail
Material parameters	
Color	Pantone 419C
Shell material	PC plastic
Environmental requirements	
Allowable ambient temperature (during operation)	-20～55℃
Allowable ambient temperature (storage)	-40～85℃
Types of protection	IP20
Contamination level	2. Comply with IEC 61131-2 standard
Working altitude	0～2000m
Relative humidity (non-condensing)	5～95%RH
Anti-vibration	1g, in accordance with IEC 60068-2-6 standard
Impact resistance	15g, in accordance with IEC 60068-2-27
EMC anti-interference rating	Zone B, IEC61131-2
Corrosion resistance	Compliant with IEC 60068-2-42 and IEC 60068-2-43 standards

5.10.3 Wiring diagram

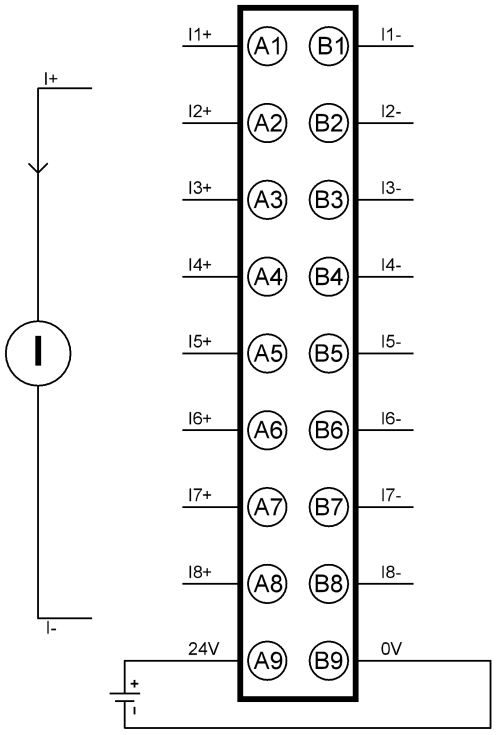

5.11 DF30-M-8AI-U

5.11.1 Part description

Light				
	LED No	Status and Meaning	LED No	Status and Meaning
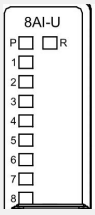	PWR	Green: The system power supply is normal	RUN	Green: The module is running normally
		Green extinguishing: The system power supply is abnormal		Green extinguishing: module hardware failure, communication failure
				Green flashing: Configuration failure/failsafe mode
	LED1-8	Green: Channels 1-8 input signal valid		
		Green extinguished: The signal input for channels 1-8 is invalid		
		Green flashing: When the input diagnostic switch on channels 1-8 is turned on, the corresponding channel input fault		
Terminals				

Serial number	signal	illustrate	Serial number	signal	illustrate
A1	U1+	Voltage input channel1	B1	U1-	Voltage input channel1
A2	U2+	Voltage input channel2	B2	U2-	Voltage input channel2
A3	U3+	Voltage input channel3	B3	U3-	Voltage input channel3
A4	U4+	Voltage input channel4	B4	U4-	Voltage input channel4
A5	U5+	Voltage input channel5	B5	U5-	Voltage input channel5
A6	U6+	Voltage input channel6	B6	U6-	Voltage input channel6
A7	U7+	Voltage input channel7	B7	U7-	Voltage input channel7
A8	U8+	Voltage input channel8	B8	U8-	Voltage input channel8
A9	24V	24V power output	B9	0V	0V output

5.11.2 Specifications

Structural parameters	
Dimensions (WxHxD)	12mm x 100mm x 80mm
Weight	71.5g
Power Parameters	
The rated voltage of the USYS bus input power supply	5V DC +20%/-15% (4.25V DC~ 6V DC)
The USYS bus input power supply is rated current	<50m
UIN power supply input rated voltage	24 V DC (20.4V DC~28.8V DC)
UIN power supply input current rating	<50mA non-distribution
	< 250mA power distribution
UIN power input anti-reverse plug protection	Yes
The module prevents the spread of power failures	Yes

Functional parameters	
Module type	Analog input module
Number of channels	8
signaltype	voltage
Connection type	2-wire power distribution, 4-wire non-power distribution
Voltage input range	±10V、0~10V、2~10V、±5V、0~5V、1~5V
Input impedance	＞400KΩ
Voltage input accuracy	±0.1% (full scale)
Drift	±50ppm/K
Voltage protection	24V
Voltage input diagnostics	2~10V, 1~5VZ support disconnection detection
Whether to quarantine	The interface channels are not isolated, and the interface is isolated from the bus
Voltage input diagnostics	Yes
Diagnose and report feature configurations	Yes
Channel mode configuration	Disable、±10V、0~10V、2~10V、±5V、0~5V、1~5V
Input action display	When the input signal is valid, the input indicator light is solid
The channel is anti-24V misconnected	Yes
Software parameters	
Sampling period	1.6ms (8 channels)
Filtering method	Sliding window filtering, dejitter filtering, 50HZ\60HZ anti-power frequency
Data size	16 Byte
Error diagnosis	Communication diagnosis, power supply diagnosis, channel overrun diagnosis, channel disconnection diagnosis
IO mapping	Word-by-word mapping is supported

Wiring parameters	
Connectivity technology	PUSH-IN type terminals
Connection type	System/field power/input
Crimping area of the wire	0.34～1.5mm
stripping length	10mm
Installation method:	DIN-35 type rail
Material parameters	
Color	Pantone 419C
Shell material	PC plastic
Environmental requirements	
Allowable ambient temperature (during operation)	-20～55℃
Allowable ambient temperature (storage)	-40～85℃
Types of protection	IP20
Contamination level	2. Comply with IEC 61131-2 standard
Working altitude	0～2000m
Relative humidity (non-condensing)	5～95%RH
Anti-vibration	1g, in accordance with IEC 60068-2-6 standard
Impact resistance	15g, in accordance with IEC 60068-2-27
EMC anti-interference rating	Zone B, IEC61131-2
Corrosion resistance	Compliant with IEC 60068-2-42 and IEC 60068-2-43 standards

5.11.3 Wiring diagram

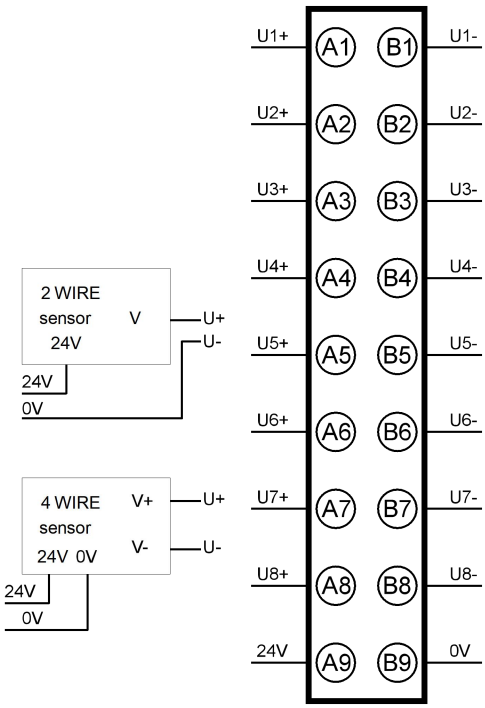

5.12 DF30-M-8AO-U

5.12.1 Part description

Light				
	LED No	Status and Meaning	LED No	Status and Meaning
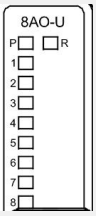	PWR	Green: The system power supply is normal	RUN	Green: The module is running normally
		Green extinguishing: The system power supply is abnormal		Green extinguishing: module hardware failure, communication failure
				Green flashing: Configuration failure/failsafe mode
	LED1-8	Green light: Channels 1-8 output signal is valid		
		Green extinguishing: The output signal of channels 1-8 is invalid		

Terminals					
Serial number	signal	illustrate	Serial number	signal	illustrate

A1	U1+	Voltage output channel1	B1	U1-	Voltage output channel1
A2	U2+	Voltage output channel2	B2	U2-	Voltage output channel2
A3	U3+	Voltage output channel3	B3	U3-	Voltage output channel3
A4	U4+	Voltage output channel4	B4	U4-	Voltage output channel4
A5	U5+	Voltage output channel5	B5	U5-	Voltage output channel5
A6	U6+	Voltage output channel6	B6	U6-	Voltage output channel6
A7	U7+	Voltage output channel7	B7	U7-	Voltage output channel7
A8	U8+	Voltage output channel8	B8	U8-	Voltage output channel8
A9	24V	24V power input	B9	0V	0V input

5.12.2 Specifications

Structural parameters	
Dimensions (WxHxD)	12mm x 100mm x 80mm
Weight	71.5g
Power Parameters	
The rated voltage of the USYS bus input power supply	5V DC +20%/-15% (4.25V DC~ 6V DC)
The USYS bus input power supply is rated current	<50mA (typical at 5V DC)
UOUT power supply input rated voltage	24 V DC +20%/-15% (20.4V DC~28.8V DC)
UOUT power supply input current rating	＜200mA
UOUT power input anti-reverse plug protection	Yes
Functional parameters	
Module type	Analog output
Number of channels	8

Signal type	voltage
Voltage output range	±10V、0~10V、2~10V、±5V、0~5V、1~5V
Voltage output load	＞1kΩ
Voltage output accuracy	±0.1% (full scale)
Whether to quarantine	The interface channel is not isolated, the interface is isolated from the bus, 500VAC
Drift	±50ppm/k
Diagnose and report feature configurations	Yes
Diagnostic tests	Communication diagnostics, power diagnostics
Channel mode settings	Disable、±10V、0~10V、2~10V、±5V、0~5V、1~5V
Output status configuration after shutdown	Keep the current output or output preset
Output status configuration after shutdown	Press the faildown state mode and no longer refresh
Output action display	When the output is valid, the output indicator light is on
Software parameters	
Convert the range of digital quantities	-20000~20000, -32000~32000, -27648~27648
IO process data size	16byte
Error diagnosis	Communication diagnostics, power diagnostics
Sync mode	Synchronization within the same coupler group is supported
IO mapping	Word-by-word mapping is supported
Wiring parameters	
Connectivity technology	PUSH-IN type terminals
Connection type	System/field power/input
Crimping area of the wire	0.34～1.5mm
stripping length	10mm
Installation method	DIN-35 type rail

Material parameters	
Color	Pantone 419C
Shell material	PC plastic
Environmental requirements	
Allowable ambient temperature (during operation)	-20～55℃
Allowable ambient temperature (storage)	-40～85℃
Types of protection	IP20
Contamination level	2. Comply with IEC 61131-2 standard
Working altitude	0～2000m
Relative humidity (non-condensing)	5～95%RH
Anti-vibration	1g, in accordance with IEC 60068-2-6 standard
Impact resistance	15g, in accordance with IEC 60068-2-27
EMC ANTI-INTERFERENCE RATING	Zone B, IEC61131-2
Corrosion resistance	Compliant with IEC 60068-2-42 and IEC 60068-2-43 standards

5.12.3 Wiring diagram

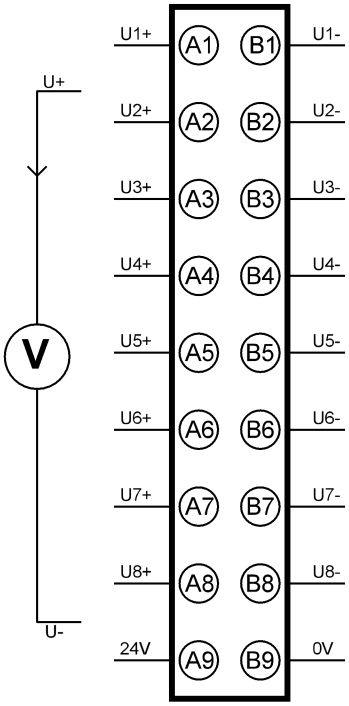

5.13 DF30-M-4RTD/TC

5.13.1 Part description

Light				
	LED No	Status and Meaning	LED No	Status and Meaning
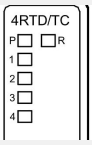	PWR	Green: The system power supply is normal	RUN	Green: The module is running normally
		Green extinguishing: The system power supply is abnormal		Green extinguishing: module hardware failure, communication failure
				Green flashing: Configuration failure/failsafe mode
	LED1-4	Green: Channels 1-4 input signal is valid		
		Green extinguished: The signal input to channels 1-4 is invalid		
		Green flashing: When the diagnostic switch for channels 1-4 is turned on, the corresponding channel input fault		

Terminals					
Serial number	signal	illustrate	Serial number	signal	illustrate
A1	RTD1+	The first channel signal input	B1	RTD1-	The first channel signal input
A2	Sense1+(TC+)	The first channel signal input	B2	Sense1-(TC-)	The first channel signal input
A3	RTD2+	Second channel signal input	B3	RTD2-	The first channel signal input
A4	Sense2+(TC+)	Second channel signal input	B4	Sense2-(TC-)	Second channel signal input
A5	RTD3+	The third channel signal input	B5	RTD3-	The third channel signal input
A6	Sense3+(TC+)	The third channel signal input	B6	Sense3-(TC-)	The third channel signal input
A7	RTD4+	Channel 4 signal input	B7	RTD4-	Channel 4 signal input
A8	Sense4+(TC+)	Channel 4 signal input	B8	Sense4-(TC-)	Channel 4 signal input
A9	/	Reserve suspension	B9	/	Reserve suspension

5.13.2 Specifications

Structural parameters	
Dimensions (WxHxD)	12mm x 100mm x 80mm
Weight	71.5g

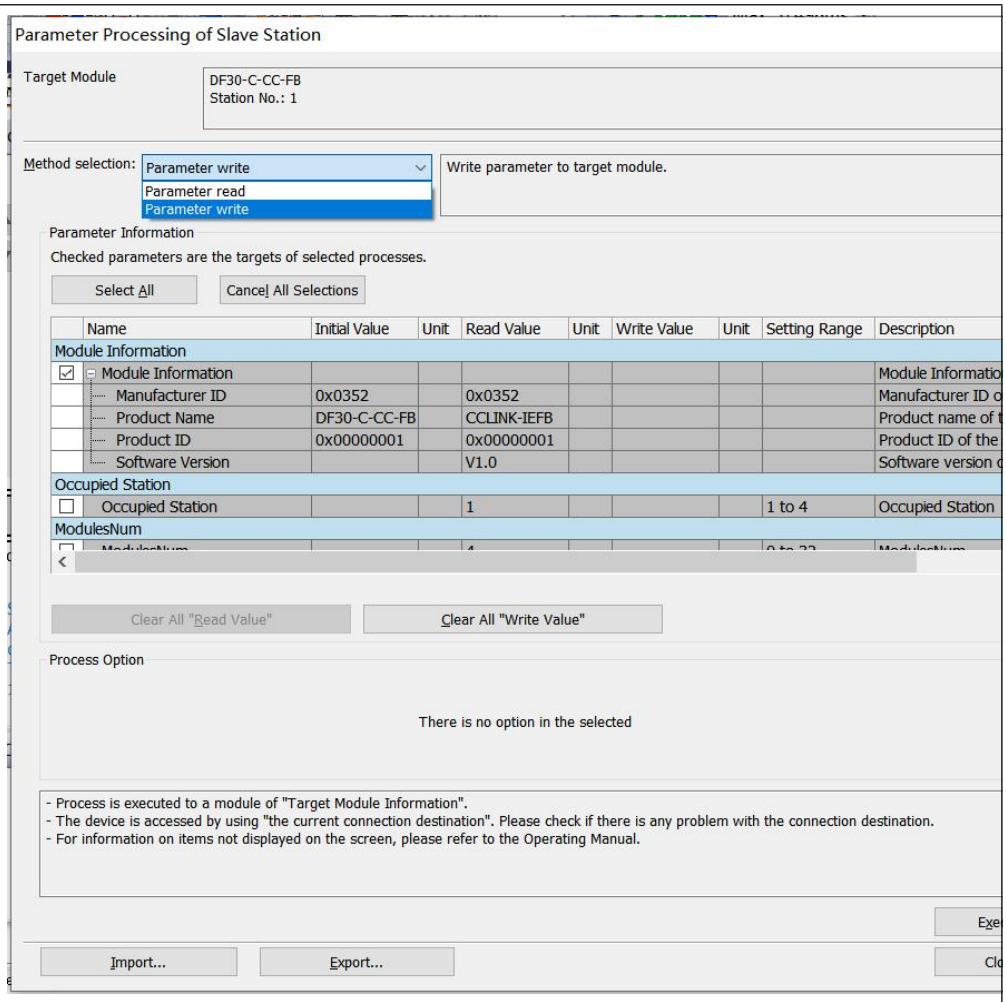

Power Parameters	
The rated voltage of the USYS bus input power supply	5V DC +20%/-15% (4.25V DC~ 6V DC)
The USYS bus input power supply is rated current	<60mA (typical at 5V DC)
Functional parameters	
Module type	Thermoresistance thermocouple measurement module
Number of channels	4

Sensor type	Pt100, Pt200, Pt500, Pt1000, Ni100, Ni120, Ni200, Ni500, Ni1000, Cu10,Cu50,Cu53,Cu100, KTY83-110, KTY83-120, KTY83-121, KTY83-122, KTY83-150, KTY83-151, KTY84-130,KTY84-150,KTY84-151,40 Ω,300 Ω, 500 Ω, 1 kΩ, 2 kΩ, K,E,T,J,B,S,R,N,C,L, ±15.625mV ,±31.25mV ,±62.5mV, ±125mV,±250mV,±500mV,±1000mV, ±2000mV
Connection	2-wire system, 3-wire system, 4-wire system
Input accuracy (25° C)	Full scale* (±0.1%)
Drift	±50ppm/K, ±0.375%
Connection method	Two-wire/three-wire/four-wire system
Whether to quarantine	The interface is isolated from the bus, between the terminal and the power supply, and not between the channels
Channel diagnostics	Over-limit alarm, over-limit alarm, disconnection alarm, overflow error
Diagnose and report feature configurations	Yes
Input action display	When the input signal is valid, the channel input indicator is solid, and when the channel diagnosis is enabled and the input signal is invalid, the channel input indicator flashes
Software parameters	
Sampling period	RTD:250ms/TC:500ms、RTD:500ms/TC:1000ms、RTD:1000ms/TC:2000ms、RTD:320ms/TC:640ms(50Hz Frequency suppression)、RTD:266ms/TC:532ms(60Hz Frequency suppression)
Filtering method	Sliding window filtering, dejitter filtering, 50HZ\60HZ anti-power frequency
Frequency interference	Support 50Hz | 60Hz rejection

suppression	
Data size	8 Byte
Error diagnosis	Communication diagnosis, power supply diagnosis, channel overrun diagnosis, channel disconnection diagnosis
IO mapping	Word-by-word mapping is supported
Wiring parameters	
Connectivity technology	PUSH-IN type terminals
Connection type	System/field power/input
Crimping area of the wire	0.34～1.5mm
Stripping length	10mm
Installation method	DIN-35 type rail
Material parameters	
Color	Pantone 419C
Shell material	PC plastic
Environmental requirements	
Allowable ambient temperature (during operation)	-20～55℃
Allowable ambient temperature (storage)	-40～85℃
Types of	IP20

protection	
Contamination level	2. Comply with IEC 61131-2 standard
Working altitude	0～2000m
Relative humidity (non-condensing)	5～95%RH
Anti-vibration	1g, in accordance with IEC 60068-2-6 standard
Impact resistance	15g, in accordance with IEC 60068-2-27
EMC anti-interference rating	Zone B, IEC61131-2
Corrosion resistance	Compliant with IEC 60068-2-42 and IEC 60068-2-43 standards

5.13.3 Wiring diagram

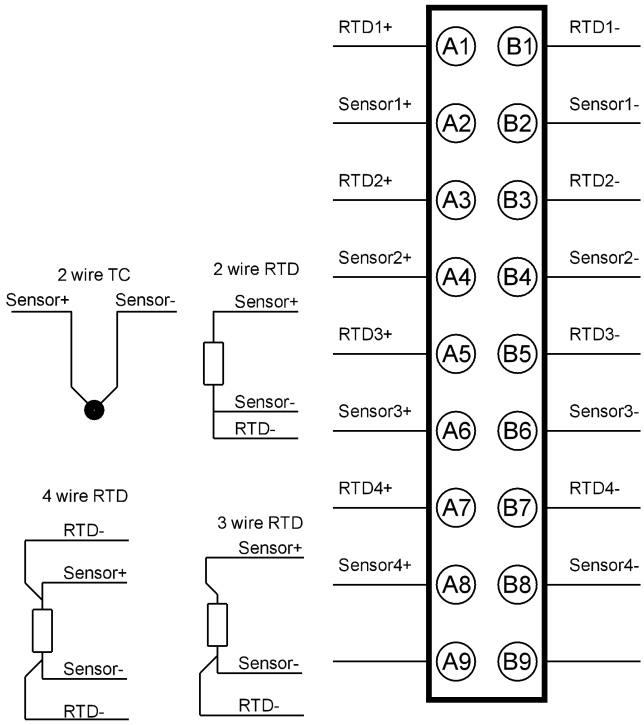

5.14 DF30-M-8TC

5.14.1 Part description

Light				
	LED No	Status and Meaning	LED No	Status and Meaning
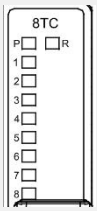	PWR	Green: The system power supply is normal	RUN	Green: The module is running normally
		Green extinguishing: The system power supply is abnormal		Green extinguishing: module hardware failure, communication failure
				Green flashing: Configuration failure/failsafe mode
	LED1-8	Green: Channels 1-8 input signal valid		
		Green extinguished: The signal input for channels 1-8 is invalid		
		Green flashing: When the input diagnostic switch on channels 1-8 is turned on, the corresponding channel input fault		
Terminals				

Serial number	signal	illustrate	Serial number	signal	illustrate
A1	TC1+	Thermocouple input channel1	B1	TC1-	Thermocouple input channel1
A2	TC2+	Thermocouple input channel2	B2	TC2-	Thermocouple input channel2
A3	TC3+	Thermocouple input channel3	B3	TC3-	Thermocouple input channel3
A4	TC4+	Thermocouple input channel4	B4	TC4-	Thermocouple input channel4
A5	TC5+	Thermocouple input channel5	B5	TC5-	Thermocouple input channel5
A6	TC6+	Thermocouple input channel6	B6	TC6-	Thermocouple input channel6
A7	TC7+	Thermocouple input channel7	B7	TC7-	Thermocouple input channel7
A8	TC8+	Thermocouple input channel8	B8	TC8-	Thermocouple input channel8
A9	\	\	B9	\	\

5.14.2 Specifications

Structural parameters	
Dimensions (WxHxD)	12mm x 100mm x 80mm
Weight	71.5g
Power Parameters	
The rated voltage of the USYS bus input power supply	5V DC +20%/-15% (4.25V DC~ 6V DC)
The USYS bus input power supply is rated current	<60mA

Functional parameters	
Module type	Analog input
Number of channels	8
Analog input	Thermocouple
Connection type	2-wire system
Display sensitivity	0.1℃
Input terminals	Thermocouple inputs, thermocouple types: K, E, T, J, B, S, R, N, C, L, ± 15.625mV, ±31.25mV, ±62.5mV, ±125mV, ±250mV, ±500mV, ±1000mV, ±2000mV
Compensation method	Internal cold end compensation
Accuracy (normal temperature 25° C)	Thermocouple measurement: (±0.1%) (± 125mV full scale) + cold end compensation error Voltage Measurement: (±0.1%) (±2000mV Full Scale)
Accuracy (Operating Temperature -20° C~55° C)	Thermocouple measurement: (±0.3%) (±125mV full scale) + cold end compensation error Voltage measurement: (±0.3%) (±2000mV full scale)
Whether to quarantine	The interface is isolated from the bus, between the terminal and the power supply, and not between the channels
Input action display	When the output is active, the output indicator light is on (software control)
Software parameters	
Sampling period	500ms、1000ms、2000ms、1280ms(50Hz Frequency suppression)、1064ms(60Hz Frequency suppression)
Filtering method	Sliding window filtering, dejitter filtering, 50HZ\60HZ anti-power frequency
Data size	16 Byte
Error diagnosis	Communication diagnosis, power supply diagnosis, channel overrun diagnosis, channel disconnection diagnosis
IO mapping	Word-by-word mapping is supported

Wiring parameters	
Connectivity technology	PUSH-IN type terminals
Connection type	System/field power/input
Crimping area of the wire	0.34～1.5mm
Stripping length	10mm
Installation method	DIN-35 type rail
Material parameters	
Color	Pantone 419C
Shell material	PC plastic
Environmental requirements	
Allowable ambient temperature (during operation)	-20～55℃
Allowable ambient temperature (storage)	-40～85℃
Types of protection	IP20
Contamination level	2. Comply with IEC 61131-2 standard
Working altitude	0～2000m
Relative humidity (non-condensing)	5～95%RH
Anti-vibration	1g, in accordance with IEC 60068-2-6 standard
Impact resistance	15g, in accordance with IEC 60068-2-27
EMC anti-interference rating	Zone B, IEC61131-2
Corrosion resistance	Compliant with IEC 60068-2-42 and IEC 60068-2-43 standards

5.14.3 Wiring diagram

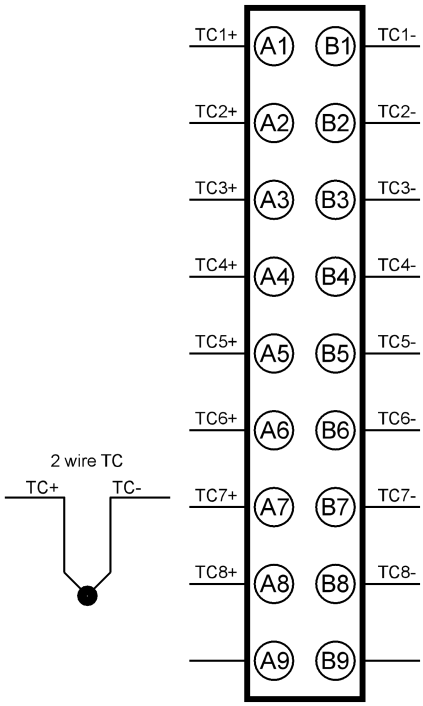

6 Configuration example

6.1 DF30-C-CC-FB IP Setting

6.1.1 Set the IP address through the dip switch.

- Code value calculation: As shown in Figure A, the code switch has 8 positions, namely positions 1 to 8. Each position represents a value. When pushed to the "ON" position, they represent 1, 2, 4, 8, 16, 32, 64, and 128 respectively. The sum of the values represented by the "ON" positions is the code value. Address 11 is: 1 (position 1) + 2 (position 2) + 8 (position 4) = 11. Address 30 is: 2 (position 2) + 4 (position 3) + 8 (position 4) + 16 (position 5) = 30; When all the positions are pushed down, it represents 0.

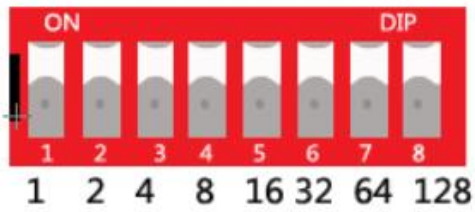

Figure A Dial switch

- When setting the IP address through the Dial switch at the time of factory

shipment

- The default IP address of the adapter is 192.168.3.2 when it is manufactured. (When the code value is 0).

If the user modifies the code settings, and after the adapter is powered on again, the IP address will be 192.168.3.xxx (where xxx is the code switch value, ranging from 1 to 253)。

- ➢ After the IP address has been set through the upper computer, when setting the IP address using the dip switch
- The IP address uses the high 3 bytes of the IP address set by the host computer, and the low 1 byte is set by the dip switch.

For example, after setting it to 172.10.0.12 through the host computer, when changing the settings of the code switch, the IP address will be 172.10.0.xxx, where xxx represents the setting value of the code switch (1 to 253).

6.1.2 Setting the IP address through Conf_TestTool_To Master.exe

- ➢ After the hardware connection is completed, power supply is provided. Set the IP address of the computer used for installation to be in the same network segment as the module's IP address. (For example, if the default factory IP address of the module is 192.168.3.2, the computer's IP address can be changed to 192.168.3.201)
- ➢ OPen Conf_TestTool_To Master.exe,
- ➢ Step1 selected "Debug Mode";

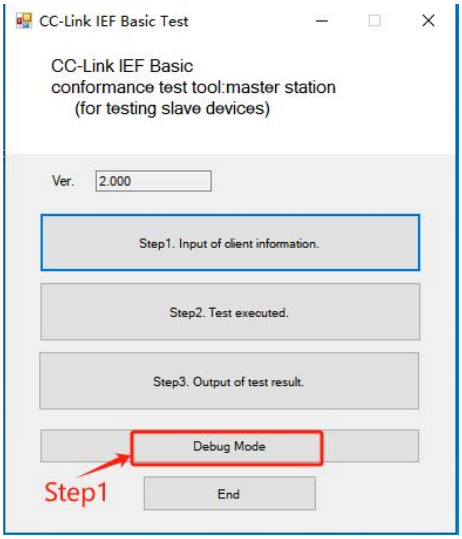

- Step2, Select the appropriate computer network interface;
- Step3, Select "Detect Connected Device";
- Step4, The indicated clicks need to be recorded "ServerMacAddr".

The following is what will be needed when modifying the IP address

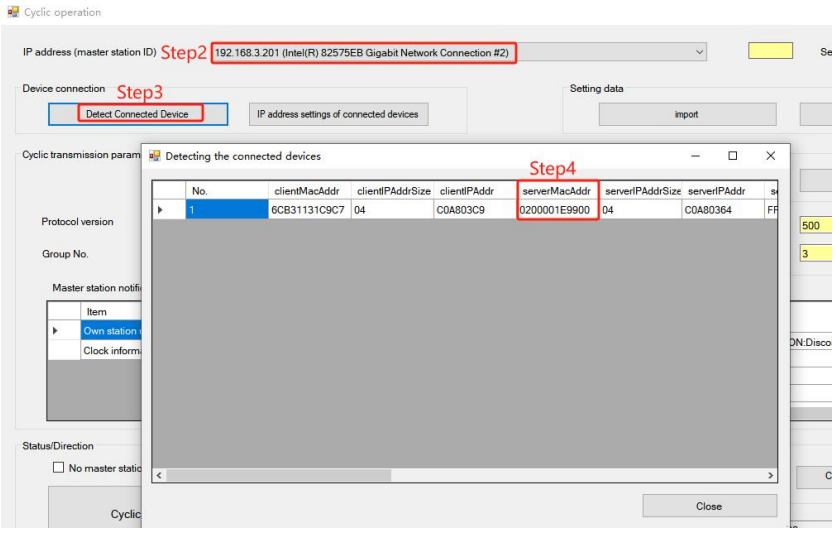

- Step5, Click "IP address settings of connected devices"
- Step6, Recorded in Step 4 "ServerMacAddr" fill in the MAC address in the middle "Slave station MAC address".
- Step7, Enter the required IP address, such as 192.168.3.100 in IP address to be set for the slave station".

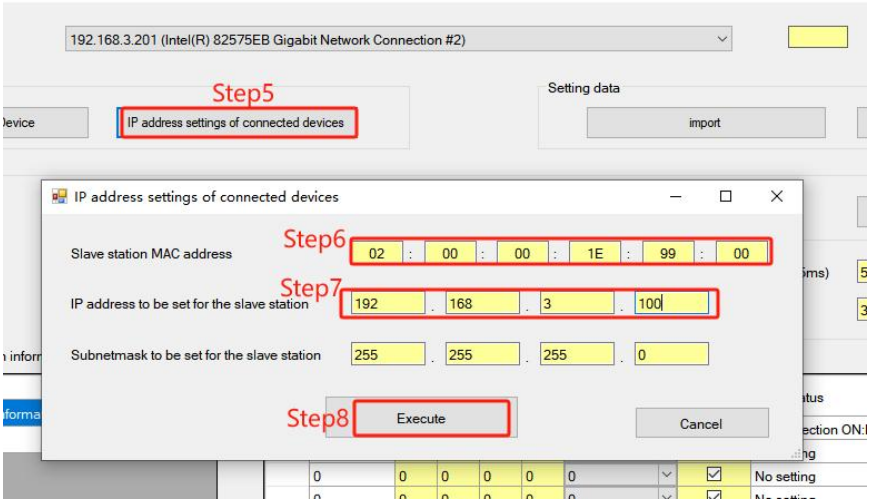

- Step8, Click to Execute;
- Step9, The IP address has been successfully modified and reconnection is

possible. Click "OK" to complete the IP modification.。

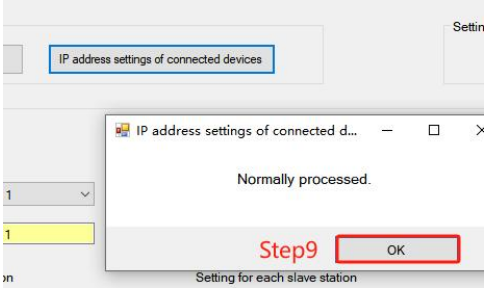

- If the user needs to modify the network segment of the adapter IP address, for example, changing the IP address to "192.168.4.100", repeat Steps 5 to 8 as shown in the figure.

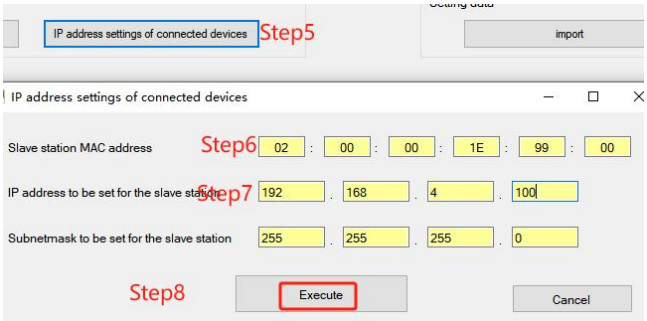

- The execution result is shown in Figure Step9. It indicates failure because after the adapter modified the network segment, the software was unable to communicate with the adapter, but in fact, the modification has been successful.

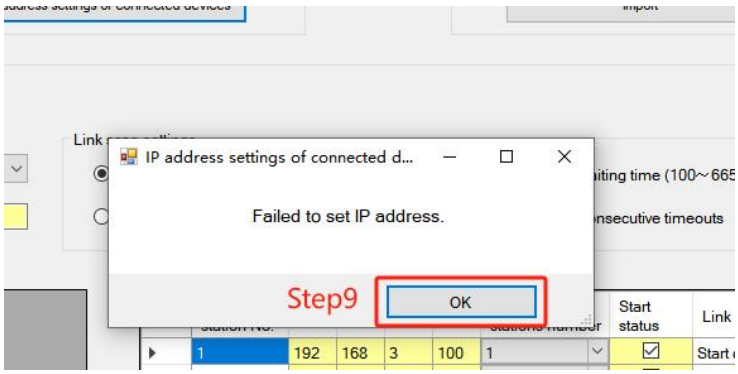

- Change the computer network IP to 192.168.4.201, recheck the adapter, and verify that the adapter IP address has been successfully modified.

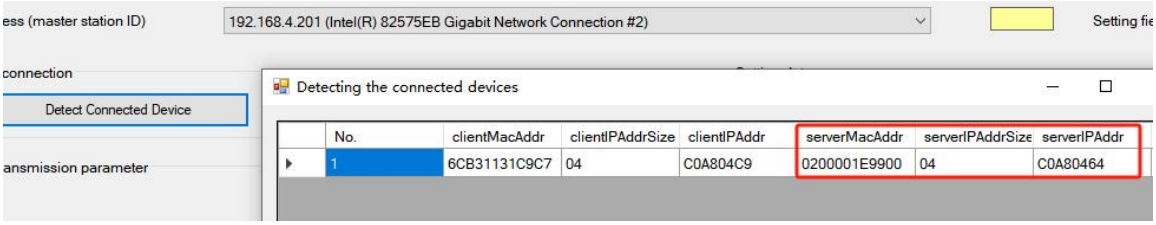

6.1.3 Dialing code settings for IP and the priority of settings for the upper computer's IP

- When the Dial switch is set to 0 or 255, the adapter's IP address will adopt the IP configured by the host computer.
- When the Dial value is greater than 0 and less than 254, the last byte of the adapter's IP address is the current jumper value, while the first three bytes are allocated by the upper computer software.

6.1.4 Reset IP address

- If the coupler encounters any issues such as forgetting the IP address, losing it, or experiencing other abnormalities during use, it can reset the module through the IP address reset function. The factory reset operation can be performed by making special operations with the Dial switch . The specific steps are as follows:
- As shown in the figure, set the jumpers to 254, power on the module, and at this time the default IP address of the module will be: 192.168.3.254.

- After the module is powered on, under the condition of uninterrupted power supply, as shown in the figure, then set the jumper switch to 0.

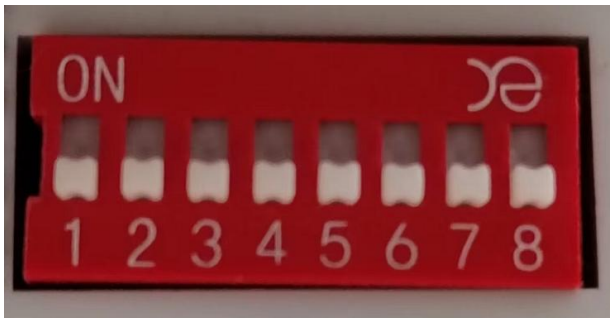

➢ Then, according to the method described in Section 6.1.2, set the IP address of the coupler.

6.2 IO Data Allocation and Explanation

Model number	Upstream process data	Downstream process data
DF30-C-CC-FB	1 Word (RWr) :Diagnostic input	1 Word (RWw) : Diagnostic output
DF30-M-16DI-P/N	16 bits (RX) :16-channel input data	/
DF30-M-32DI-P/N	32 bits (RX) :32-channel input data	/
DF30-M-16DO-N	/	16 bits (RY) :16-channel output data
DF30-M-16DO-P	/	16 bits: (RY) :16-channel output data
DF30-M-8DO-R	/	8 bits (RY) :8-channel output data
DF30-M-32DO-P	/	32 bits (RY) :32-channel output data
DF30-M-32DO-N	/	32 bits (RY) :32-channel output data
DF30-M-4AI-UI	4 words (RWr) :4-channel input data	/
DF30-M-8AI-U	8 words (RWr) :8-channel input data	/
DF30-M-8AI-I	8 words (RWr) :8-channel input data	/
DF30-M-4AO-UI	/	4 words (RWw) :4-channel output data
DF30-M-8AO-U	/	8 words (RWw) :8-channel output data
DF30-M-8AO-I	/	8 words (RWw) :8-channel output data
DF30-M-4RTD/TC	4 words (RWr) :4-channel input data	/
DF30-M-8TC	8 words (RWr) :8-channel input data	8 words (RWw) :8-channel temperature compensation output data

- Diagnosis data description:

1 Word (RWr) :Diagnostic input status word		
Byte No.	Explanation	Note

Byte 0	Fault code	If the high 8 bits = 0, then the low 8 bits = module fault code: Refer to the fault code description) (If the high 8 bits = 1 to 8, then the low 8 bits = channel fault code: Refer to the fault code description)
Byte 1		
1 Word (RWw) : Diagnostic output control word		
Byte No.	Explanation	Note
Byte 0	Reserve	/
Byte 1		

6.3 DF30-C-CC-FB Configure the routine in the GX3 software environment

The demonstration system uses the FX5U-32MT/ES controller as the master station module of the CC-Link IEFB, and the DF30-C-CC-FB as the slave station module of the CC-Link IEFB. The remote I/O modules include DF30-M-16DI-P/N, DF30-M-16DO-P, DF30-M-4AI-UI, and DF30-M-4AO-UI.

6.3.1 Install the CSP file

a. Open the GX Work3 software, click on the "Tool" item in the menu bar, and then click "Profile Management -> Register", as shown in the figure below.

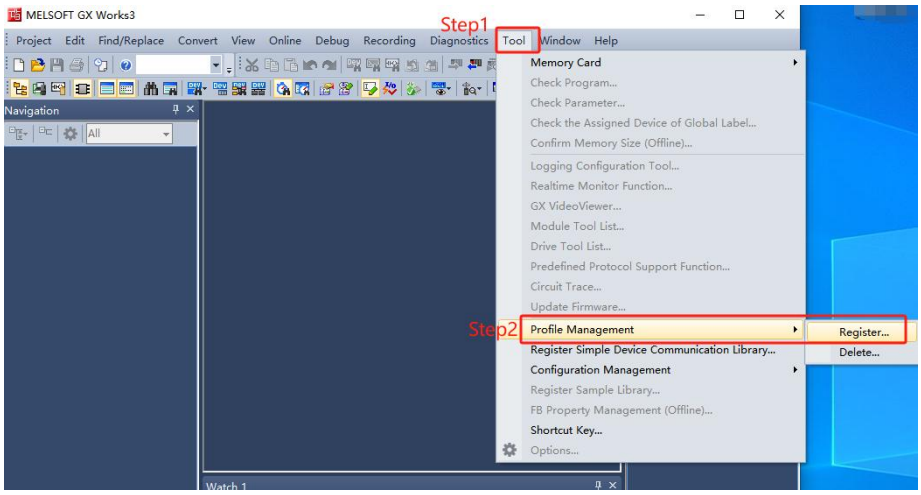

b. In the pop-up window, select the CSP file to be added, and click "Login" to complete the installation, as shown in the following figure.

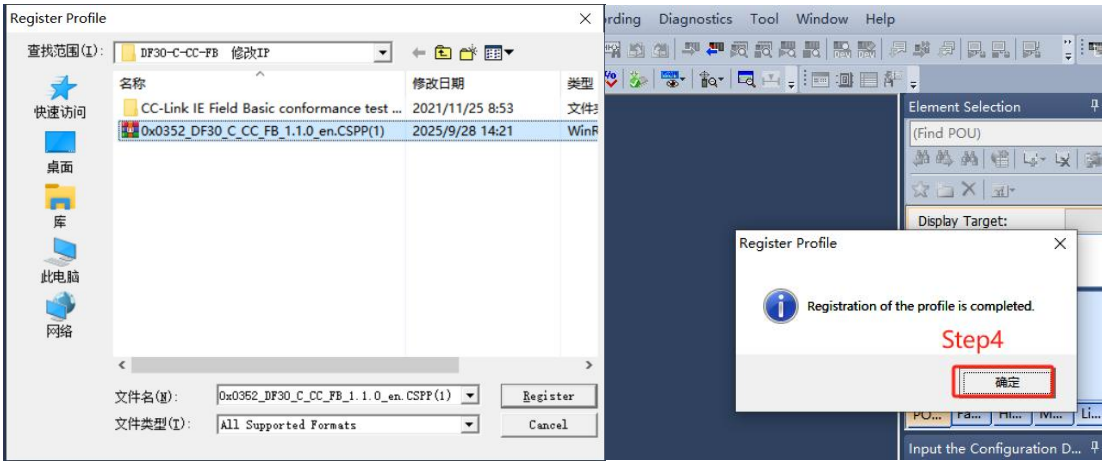

c. The configuration file does not need to be decompressed. During installation, the project must be closed. If the configuration file needs to be replaced, it is essential to uninstall it first before adding it.

6.3.2 Create project

a. Click on "New Project" in the menu bar.。

b. Pop up the dialog box for creating a new project. For the PLC series, select "FX5CPU", for the PLC type, select "FX5U", and the default programming language is Ladder.

c. Click "OK", as shown in the following picture.

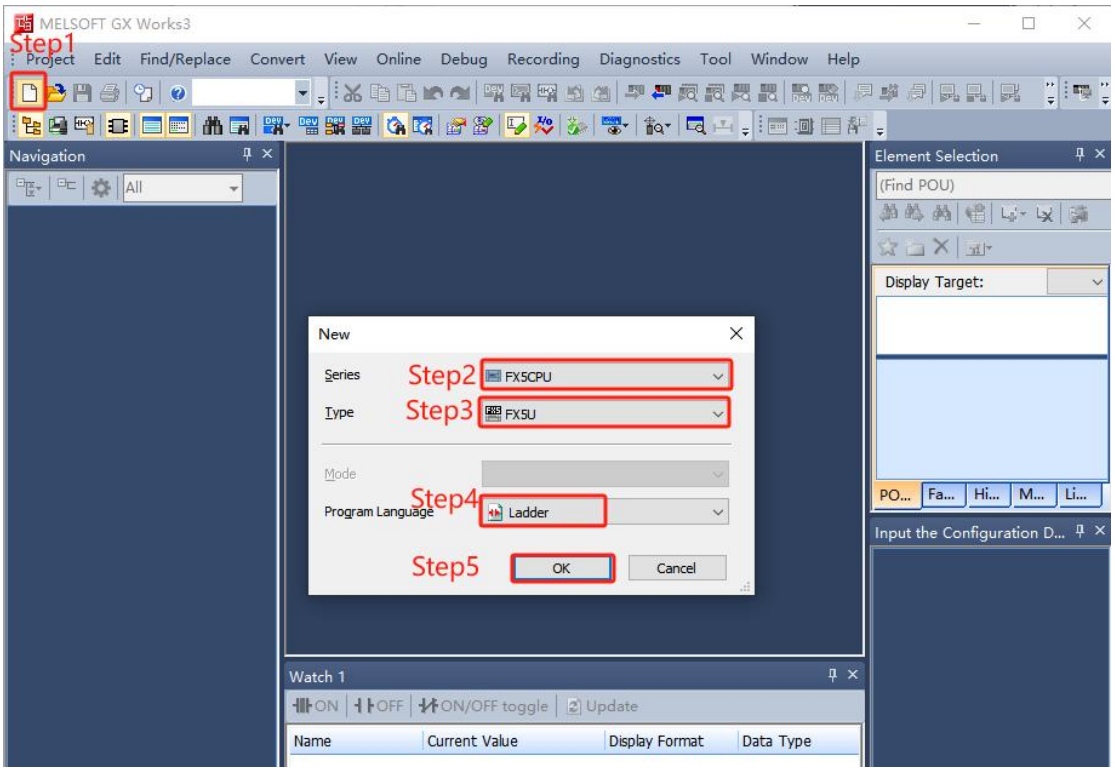

d. As shown in the figure below, the project has been successfully created.

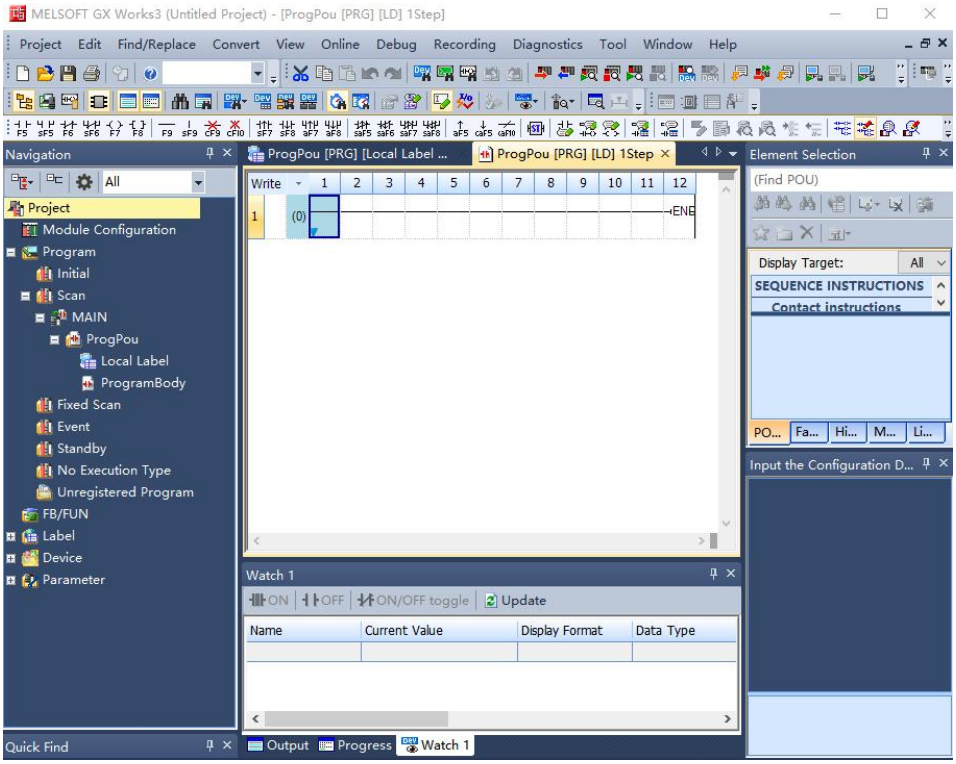

6.3.3 Establish the configuration.

➢ Enable the PLC remote reset function:

a. As shown in Step 1 of the following figure, on the left navigation interface, select "Parameter -> FX5UCPU -> CPU Parameter", and double-click "CPU Parameter";

b. As shown in Step 2 of the following figure, double-click on "Remote Reset Setting";

c. As shown in Step 4 of the following figure, click on "Apply" to select the page options.

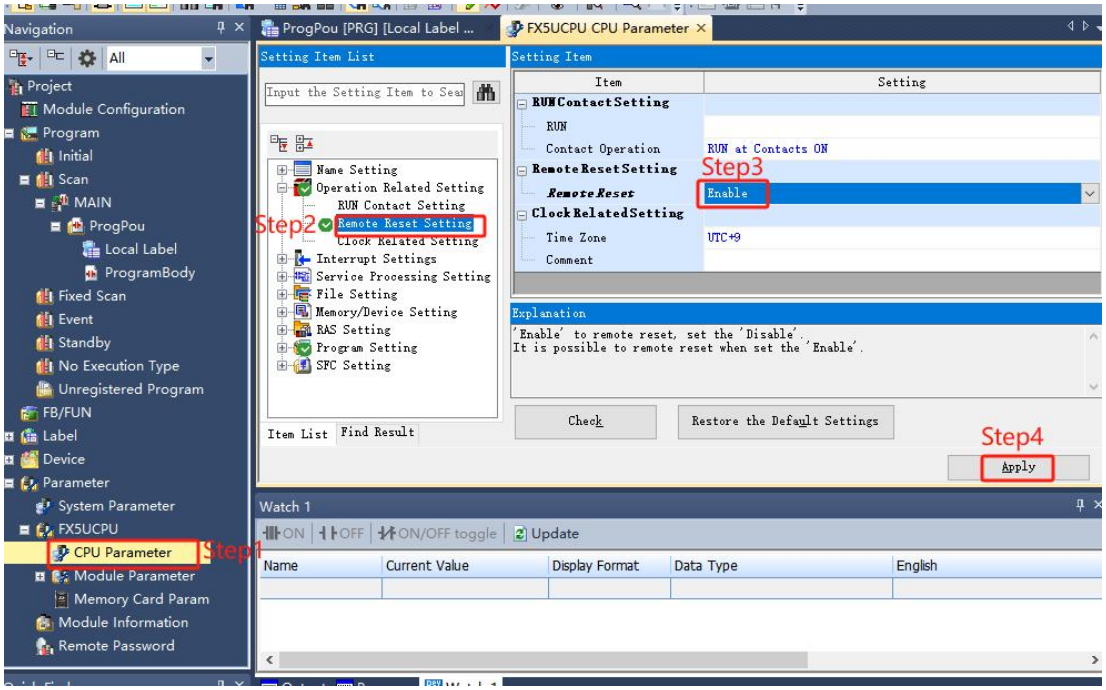

➢ Network Configuration:

a. As shown in Step 1 of the following diagram, double-click "Ethernet Port";

b. As shown in Step 2 of the following figure, set the "IP Address" and "Subnet Mask" under "Own NodeSettings".

c. As shown in Step 3 of the following figure, in the "CC-Link IEF Basic Settings" -> "To Use or Not to Use CC-Link IEF Basic Setting" option, set "Use"

d. As shown in Step 4 of the following figure, in the "CC-Link IEF Basic Settings" -> "Network Configuration Settings" option, double-click on <Detailed Setting> to enter Step 5.

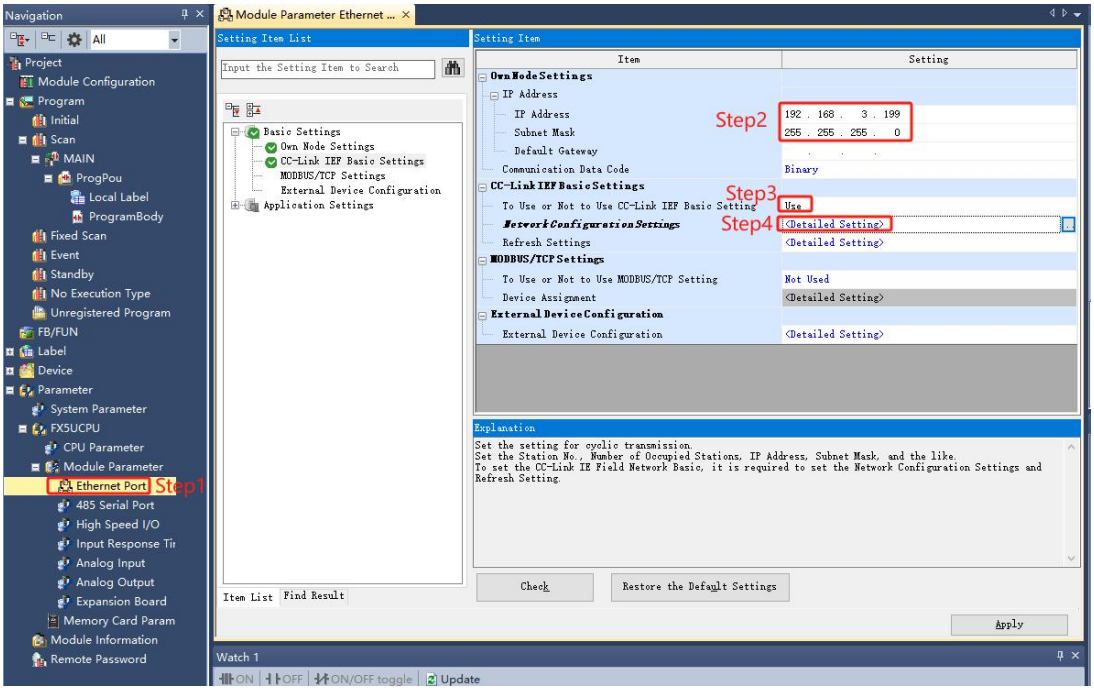

As shown in Steps 5, 6 and 7 of the figure, scan the slave station equipment.

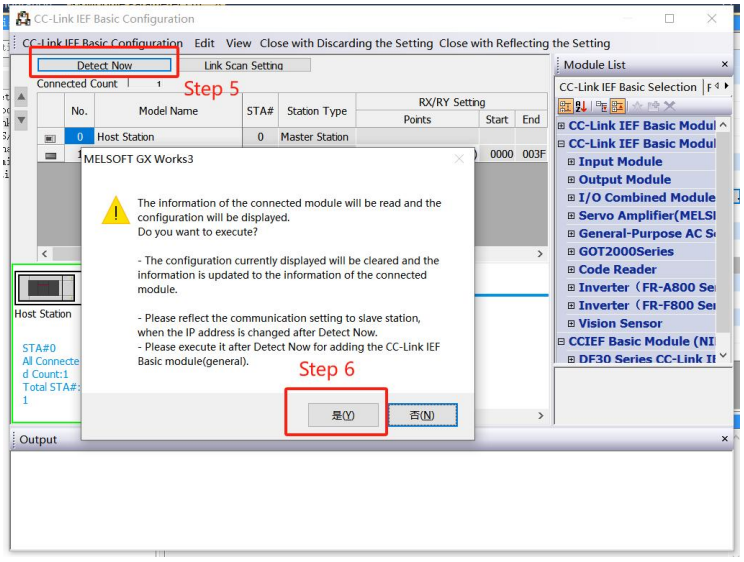

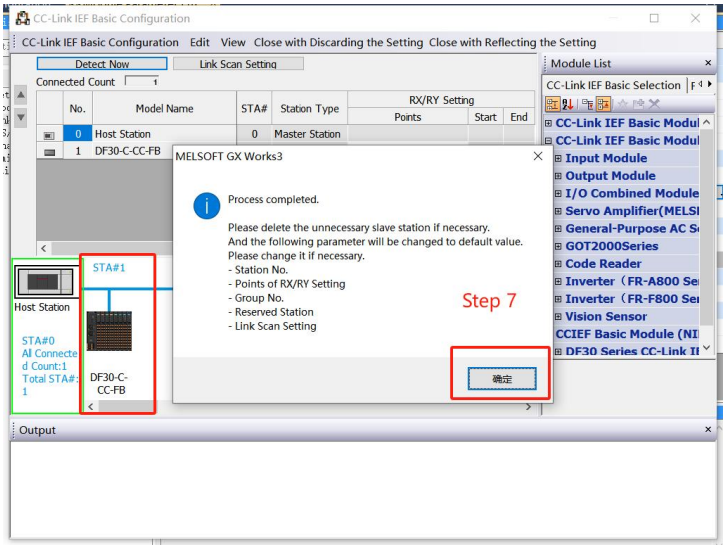

e. As shown in Step 8 of the figure, click on "Parameter Process of Slave Station" to set the parameters for the slave station.

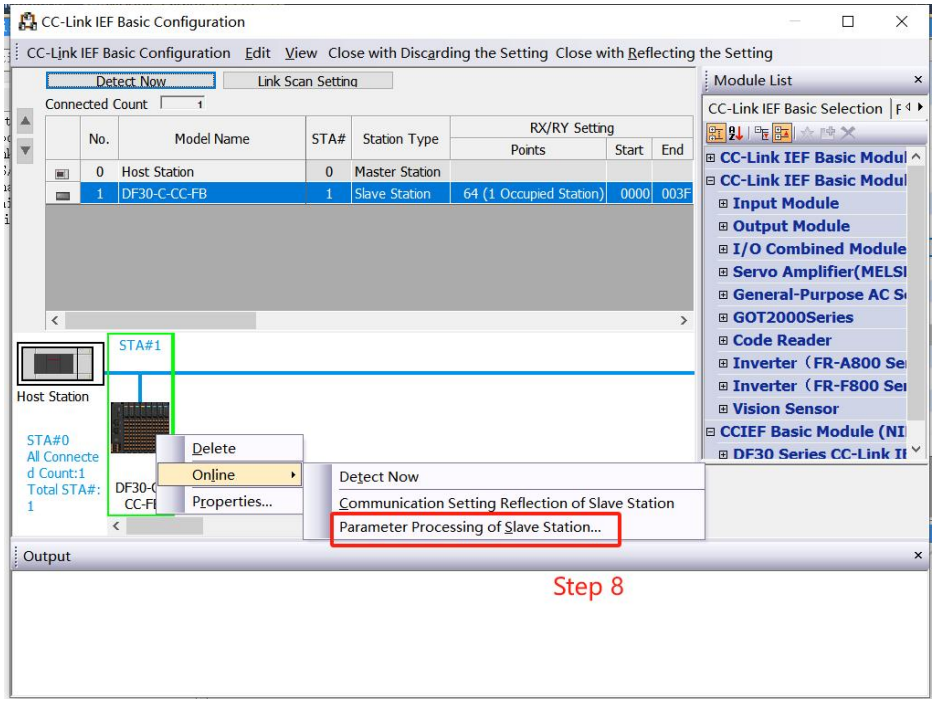

f. The interface for reading or writing station parameters is shown in the following figure.

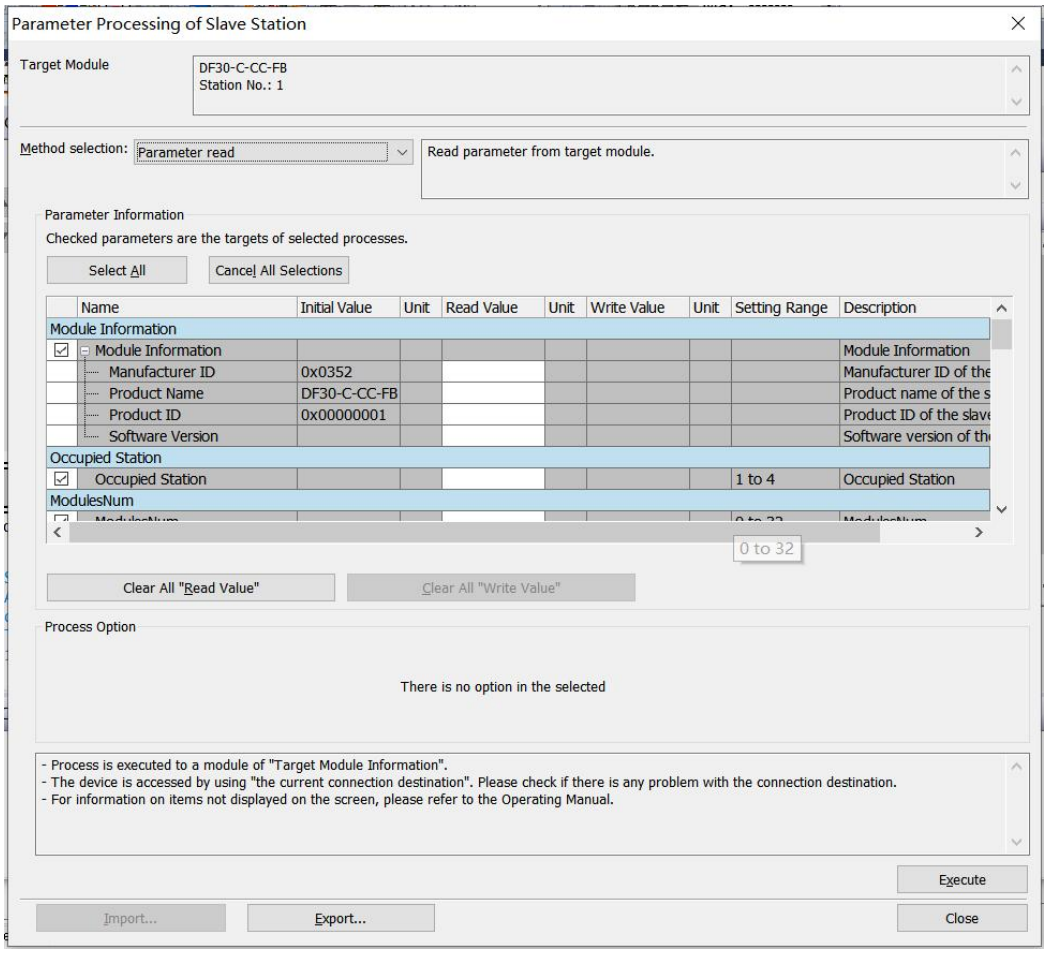

g. As shown in Steps 9 to 12 in the figure, the parameters of the slave station are read.

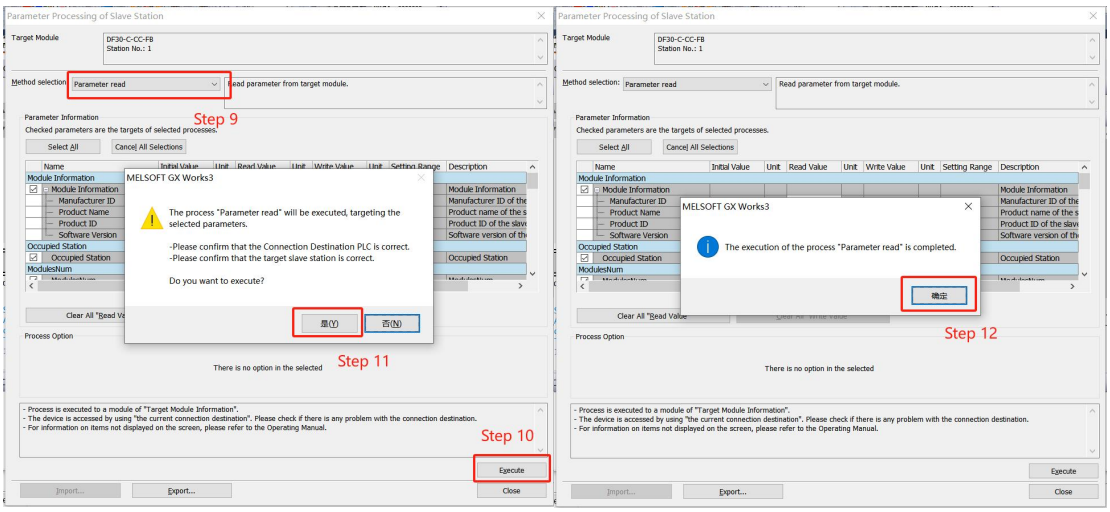

h. As shown in Step 13 of the following figure, record the number of occupied stations at the recording station, which will be used in the subsequent settings.

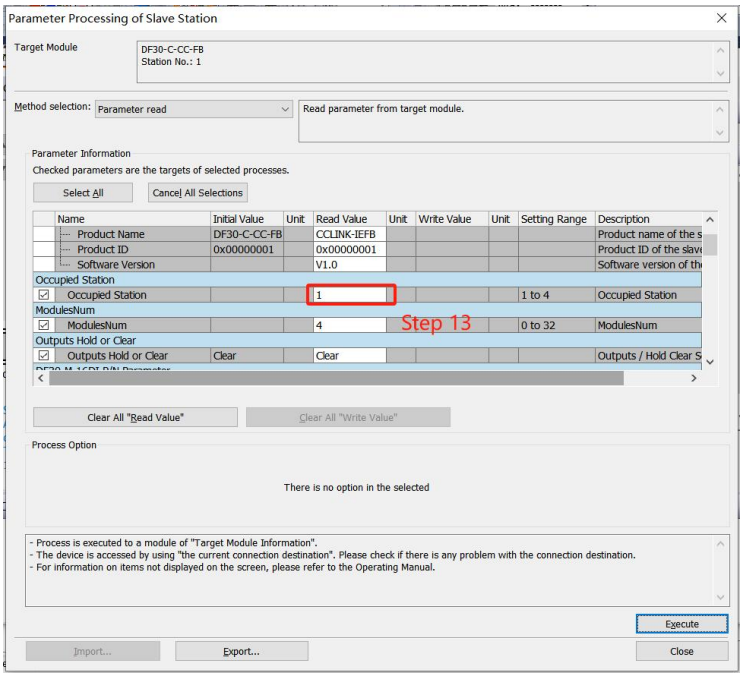

i. As shown in Step 14 of the following figure, select the number of stations based on the "Occupied Station" number "1" from Step 13. As shown in Step 15, click "Close with Reflecting Settings" to apply the settings and then close.

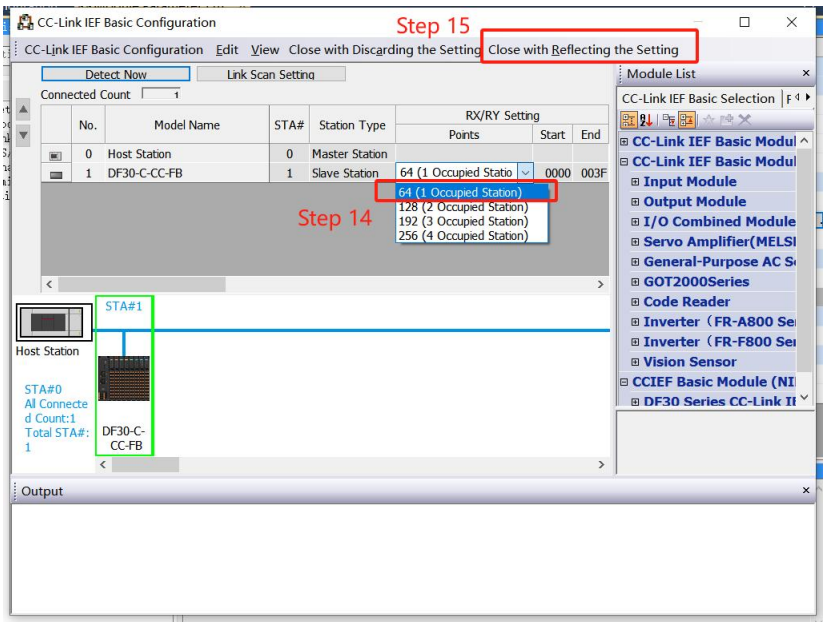

j. As shown in Step 16 of the following figure, double-click on CC-Link IEF Settings -> Refresh Settings -> Detailed Setting to enter the refresh settings interface.

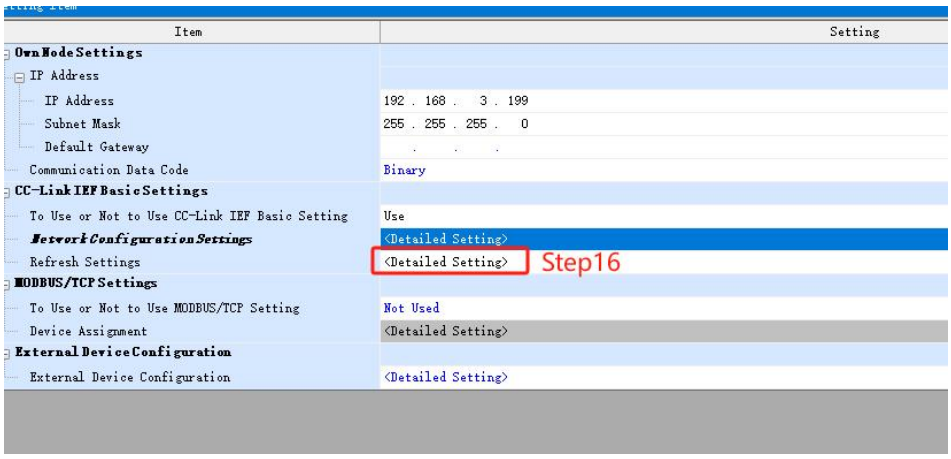

k. As shown in Steps 17 to 18 in the figure below, perform the refresh settings and apply the settings.

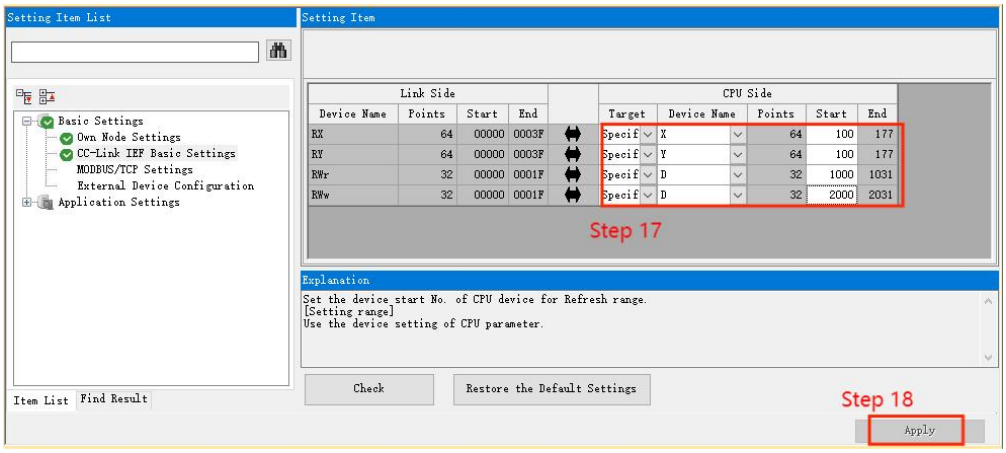

l. As shown in Figure Step 19, the project was compiled. As shown in Figure Step 20, there were no errors.

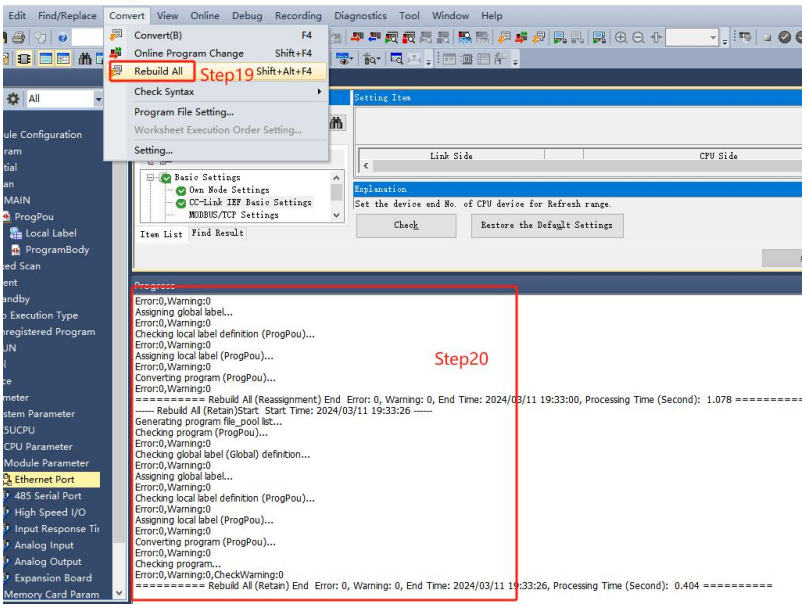

m. As shown in Steps 21 to 29 in the figure, download the project.

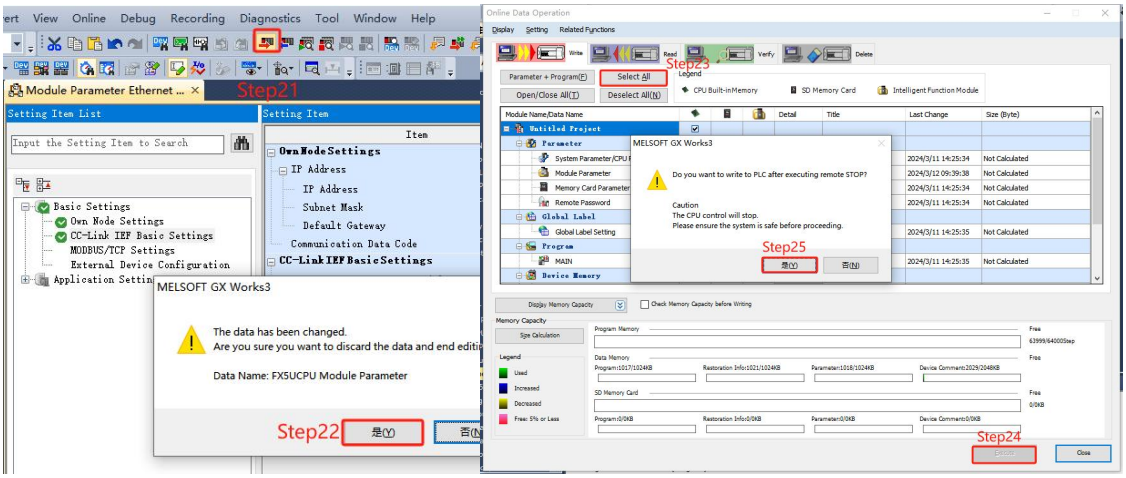
Step21
Step22
Step23
Step24
Step25
MELSOFT GX Works3
The data has been changed.
Are you sure you want to discard the data and end editi
Data Name: FXSUCPU Module Parameter
Do you want to write to PLC after executing remote STOP?
Caution
The CPU control will stop.
Please ensure the system is safe before proceeding.

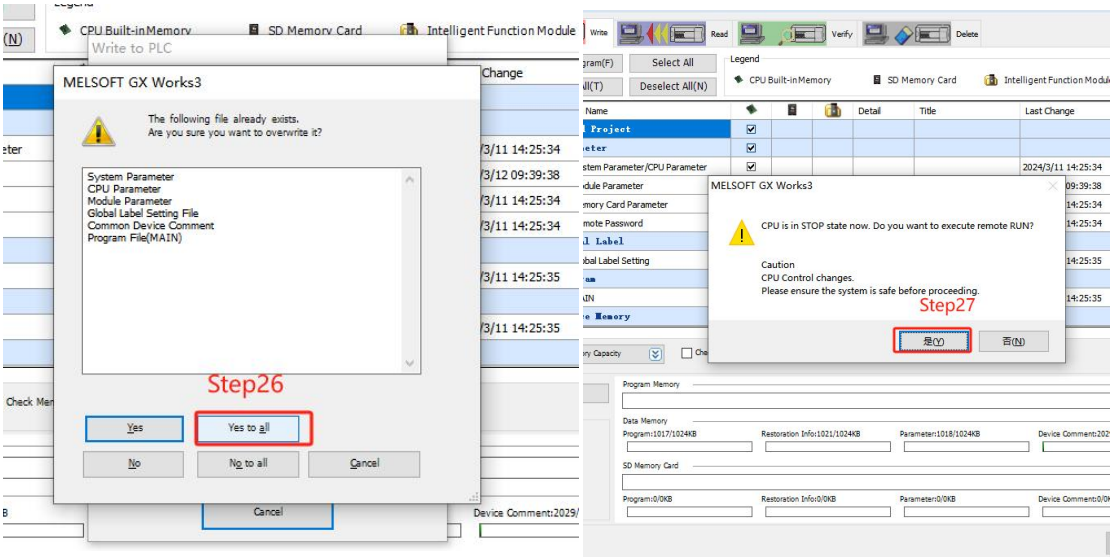
Write to PLC
MELSOFT GX Works3
The following file already exists.
Are you sure you want to overwrite it?
System Parameter
CPU Parameter
Module Parameter
Global Label Setting File
Common Device Comment
Program File(MAIN)
Step26
Yes
Yes to all
No
No to all
Cancel
CPU is in STOP state now. Do you want to execute remote RUN?
Caution
CPU Control changes.
Please ensure the system is safe before proceeding.
Step27

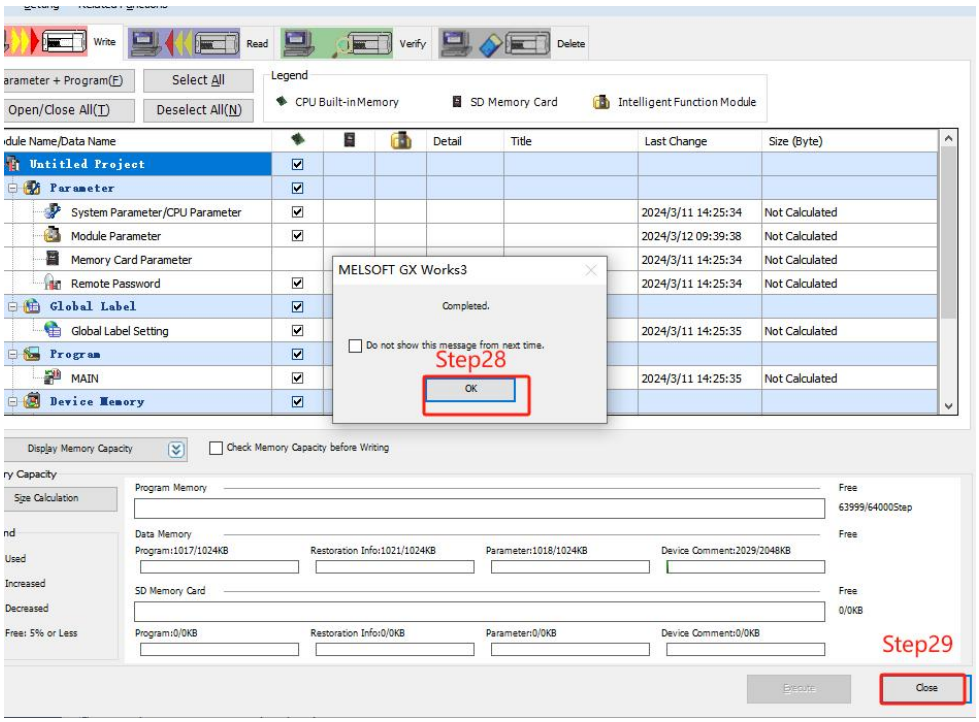
MELSOFT GX Works3
Completed.
Do not show this message from next time.
Step28
OK
Step29
Close

n. As shown in Steps 30 to 39 in the figure, reset the PLC and set it to the RUN state. This way, there is no need to perform a power-off operation on the PLC again.

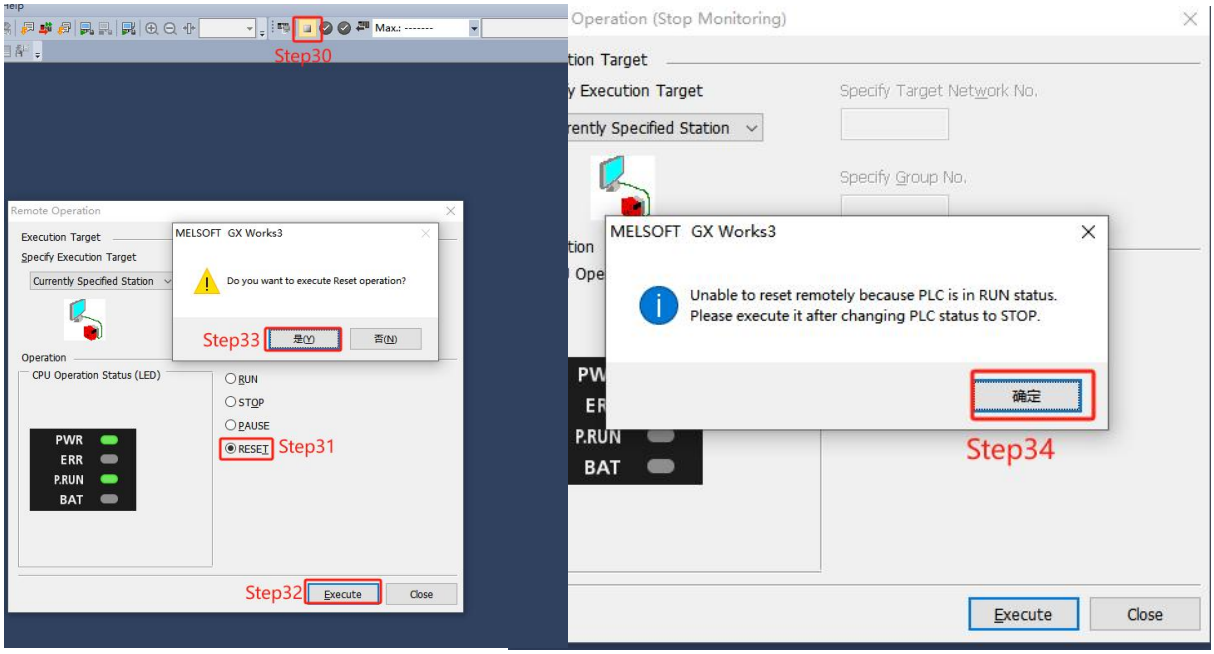

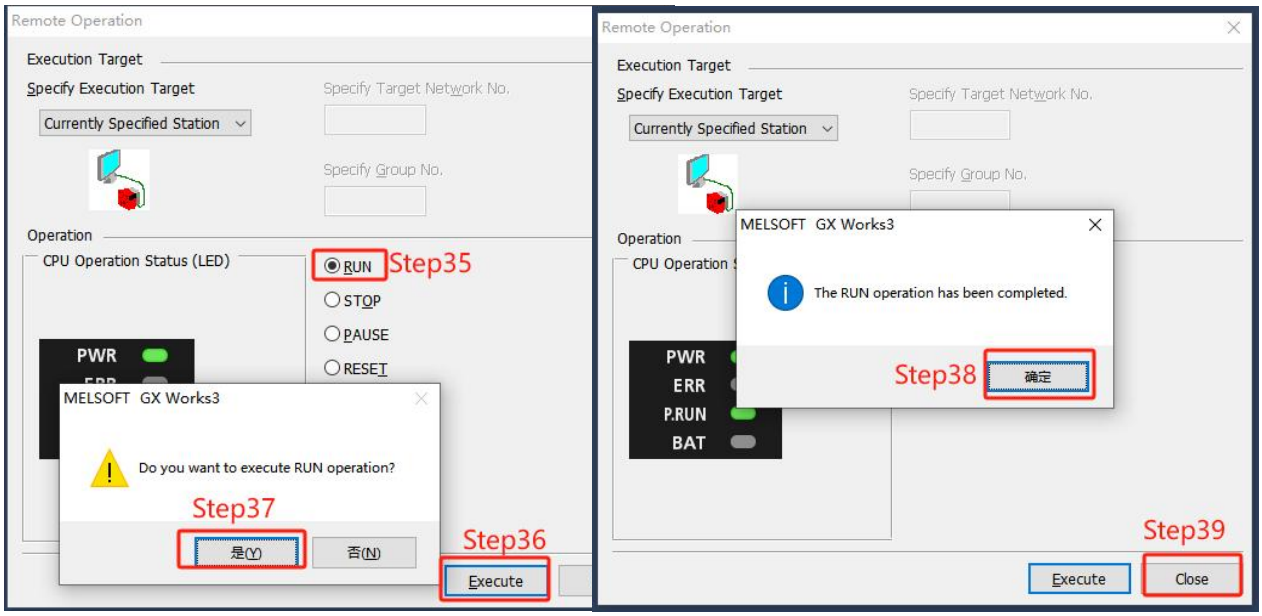

o. Monitoring settings, as shown in Figure Step 40, select "Online" -> "Monitor" -> "Device/Buffer Memory Batch Monitor".

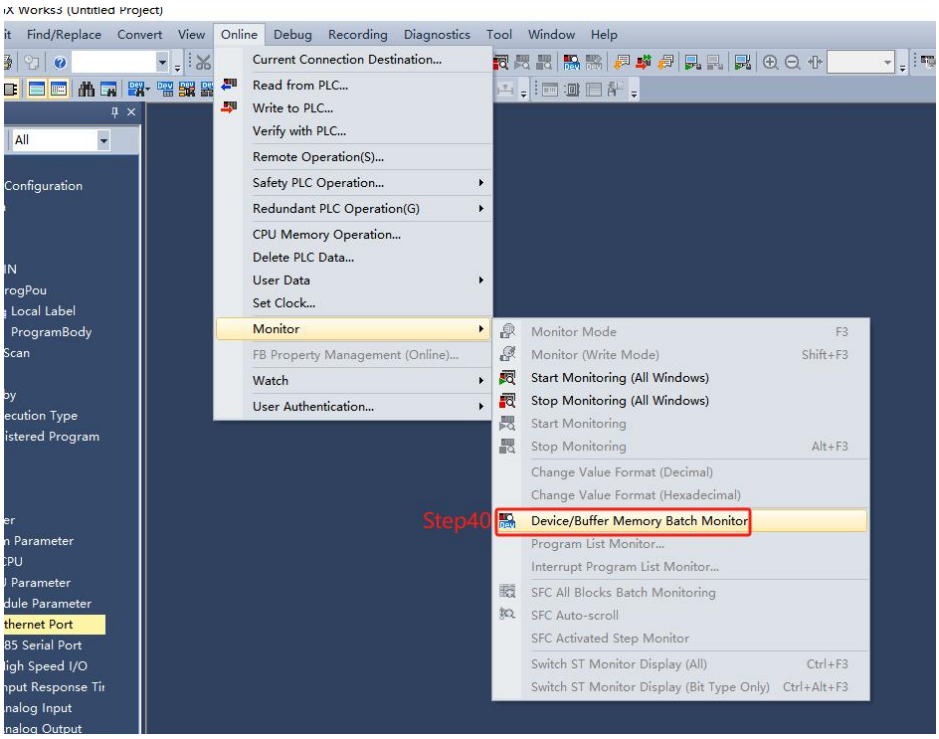

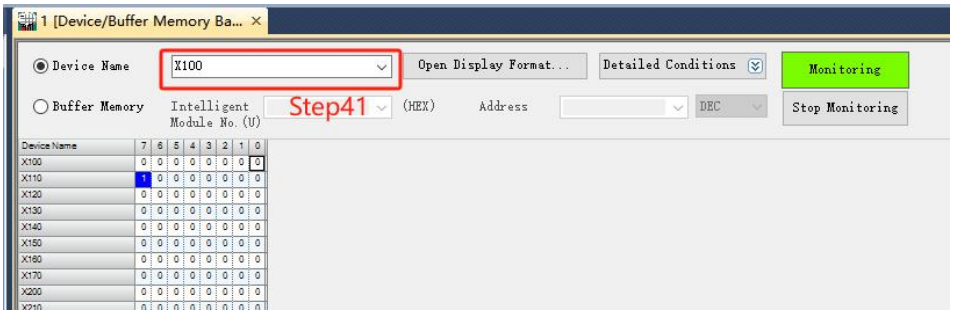

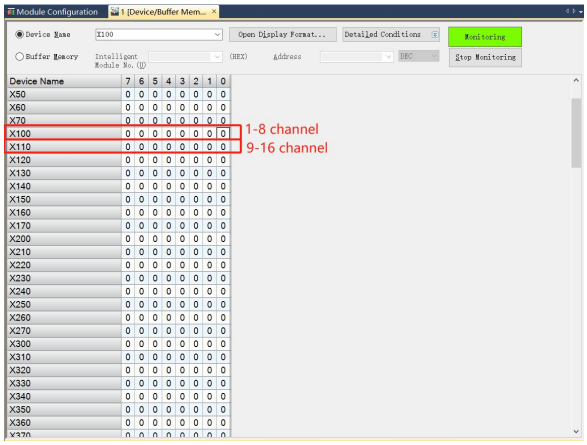

p. Repeat the above operation to establish four monitoring interfaces. In the "Device Name" fields of the four monitoring interfaces, respectively input the parameters as set in the network parameter setting interface, namely "Remote Input (RX) Refresh Soft Component", "Remote Output (RY) Refresh Soft Component", "Remote Register (RWr)", and "Remote Register (RWw)", that is, "X100", "Y100",

"D1000" and "D2000". The monitoring settings are completed.

6.3.4 From the station parameter setting instructions

➢ As shown in the figure, this is the interface for station parameters. First, execute "Parameter read" to read all the current module parameters. As shown in Table 1, this is the detailed description of the parameters in this section. If the current parameters meet the user's usage requirements, there is no need to repeatedly set the module configuration parameters.

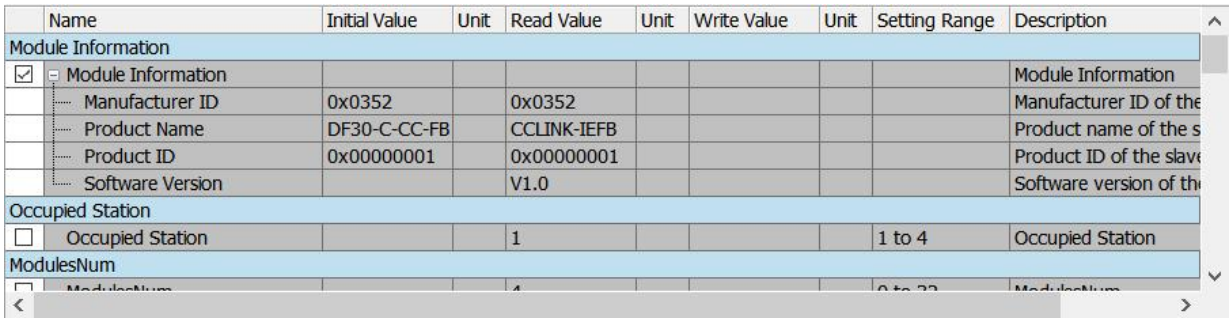

Name	Initial Value	Unit	Read Value	Unit	Write Value	Unit	Setting Range	Description
Module Information								
Module Information								Module Information
Manufacturer ID	0x0352		0x0352					Manufacturer ID of the
Product Name	DF30-C-CC-FB		CCLINK-IEFB					Product name of the s
Product ID	0x00000001		0x00000001					Product ID of the slave
Software Version			V1.0					Software version of th
Occupied Station								
Occupied Station			1				1 to 4	Occupied Station
ModulesNum								

Table 1

Name	Initial Value	Read Value	Explanation
Moudle Information			
Manufacturer ID	0x4193	0x4193	Manufacturer ID, Read-Only
Product Name	DF30-C-CC-FB	DF30-C-CC-FB	Product name, Read-only
Product ID	0x00000001	0x00000001	Product ID, Read-Only
Software Version	/	V1.0	
Occupied Station			
Occupied Station	/	2	Module occupancy of

			stations, read-only
ModulesNum			
ModulesNum	/	15	Module occupancy of stations, read-only
Outputs Hold or Clear			
Outputs Hold or Clear	Clear	Clear	The network disconnection output module maintains or resets the output, and is readable and writable.
DF30-M-16DI-P/N Parameter			
Inputs Filter	16ms	16ms	Module input filtering
DF30-M-32DI-P/N Parameter			
Inputs Filter	16ms	16ms	Module input filtering
DF30-M-4AI-UI Parameter			
Signal Range Select	-10V~+10V	-10V~+10V	Signal range selection
Dataformat Select	-20000~20000	-20000~20000	Data format selection
Frequencysuppression Select	Disable	Disable	Power frequency suppression selection
Jitterelimit Select	Disable	Disable	Filter level selection
Input Filter Select	50	50	Signal filtering selection

DF30-M-8AI-U Parameter			
Signal Range Select	-10V~+10V	-10V~+10V	Signal range selection
Dataformat Select	-20000~20000	-20000~20000	Data format selection
Frequencysuppression Select	Disable	Disable	Power frequency suppression selection
Jitterelimit Select	Disable	Disable	Filter level selection
Input Filter Select	50	50	Signal filtering selection
DF30-M-8AI-I Parameter			
Signal Range Select	4~20ma	4~20ma	Signal range selection
Dataformat Select	-20000~20000	-20000~20000	Data format selection
Frequencysuppression Select	Disable	Disable	Power frequency suppression selection
Jitterelimit Select	Disable	Disable	Filter level selection
Input Filter Select	50	50	Signal filtering selection
DF30-M-4AO-UI Parameter			
Signal Range Select	-10V~+10V	-10V~+10V	Signal range selection
Dataformat Select	-20000~20000	-20000~20000	Data format

			selection
DF30-M-8AO-U Parameter			
Signal Range Select	-10V~+10V	-10V~+10V	Signal range selection
Dataformat Select	-20000~20000	-20000~20000	Data format selection
DF30-M-8AO-I Parameter			
Signal Range Select	4~20ma	4~20ma	Signal range selection
Dataformat Select	-20000~20000	-20000~20000	Data format selection
DF30-M-4RTD/TC Parameter			
SamplingTime Select	PT100 -200...850 degree C	PT100 -200...850 degree C	Sampling time selection
Temperatureunit Select	Degree Celsius	Degree Celsius	Temperature unit selection
SensorType Select	Pt100	Pt100	Selection of sensor type
ConnectionType Select	3-wire	3-wire	Connection type selection
JittereLimit Type Select	Disable	Disable	Signal filtering selection
DF30-M-8TC Parameter			
SamplingTime Select	2000ms/8CH	2000ms/8CH	Sampling time selection
Temperatureunit Select	Degree Celsius	Degree Celsius	Temperature unit selection
SensorType Select	K	K	Selection of sensor type

JittereLimit Type Select	Disable	Disable	Connection type selection
Filter Select	0	0	Signal filtering selection

➢ If the user needs to reset the parameters, in the parameter setting pop-up window of the slave station, the processing will be set to "Parameter write", and then click "Cancel All Selections" to facilitate the individual configuration of the parameters, as shown in the following figure.

a. For example, to modify the clear/keep function parameters, you can check the "Outputs Hold or Clear" function option. In the "Write Value" section of "Outputs Hold or Clear", select "Clear" or "Hold" as needed. After setting, click "Execute" to save the parameters to the coupler and simultaneously download the parameters to the controller to make the parameters take effect. As shown in the figure below.

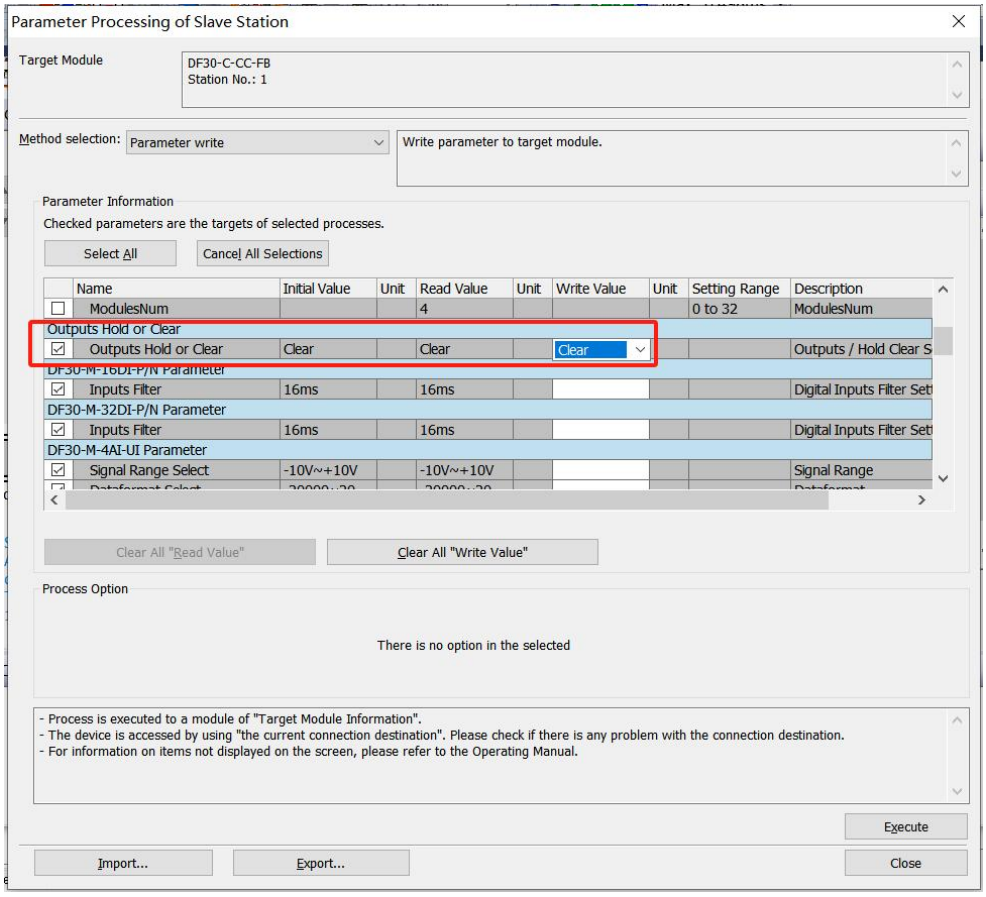

b. To modify the filtering time parameters of DF30-M-16DI-P/N and DF30-M-32DI-P/N, you can check the "Input Filter" function option. In the "Write Value" section of "Input Filter", select the desired filtering time as needed. After setting, click "Execute" to save the parameters to the coupler and simultaneously download the parameters to the controller to make them effective. As shown in the figure below.

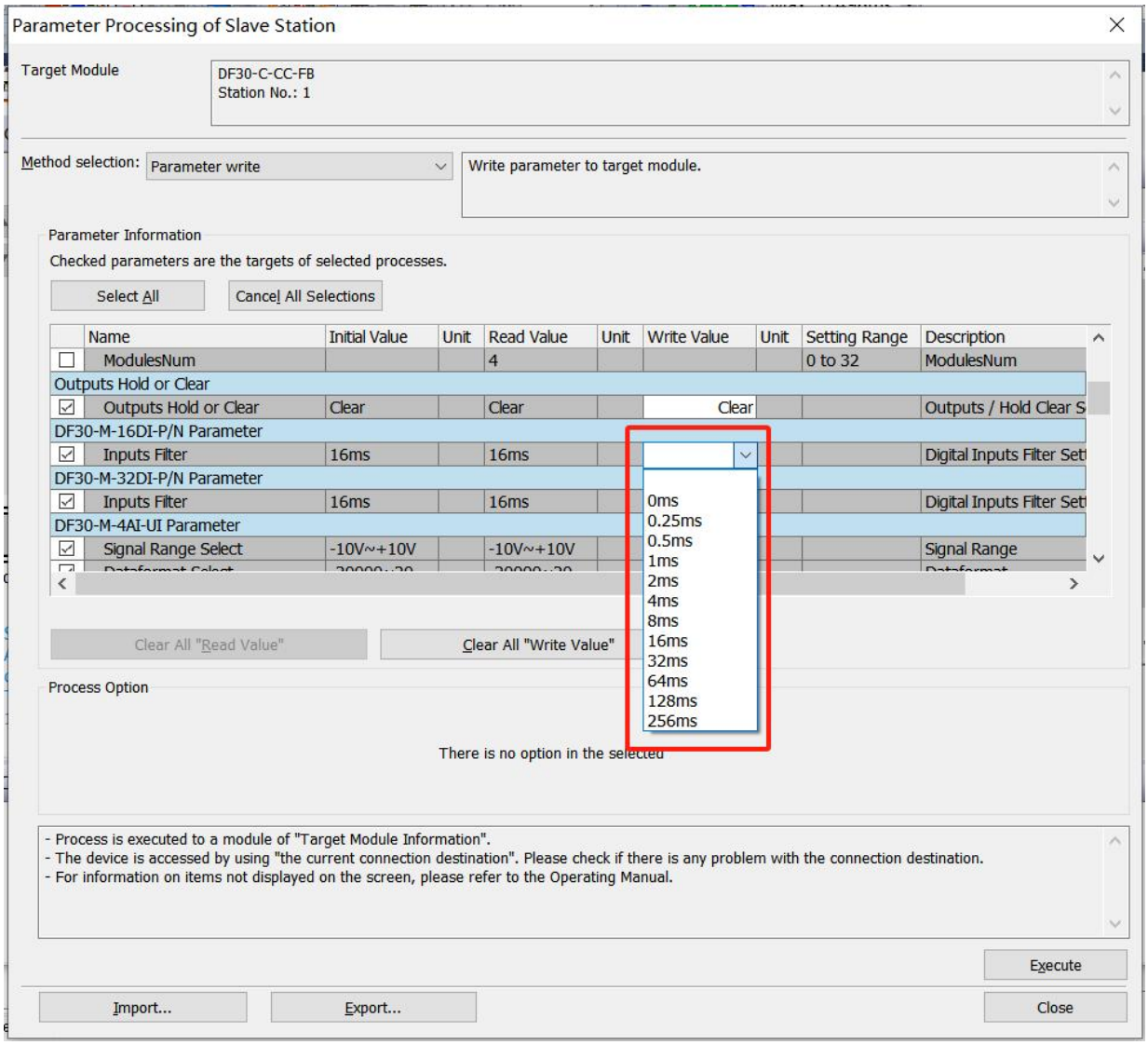

c. Modify the parameters of DF30-M-4AI-UI. This module contains 5 parameters, including the range and data format of the channel, power frequency suppression, filtering level and filtering. Select all 5 parameter options under this module. Based on the user's requirements, select the corresponding parameters. After setting, click "Execute" to save the parameters to the coupler. At the same time, download the parameters to the controller to make them effective. As shown in the figure below.

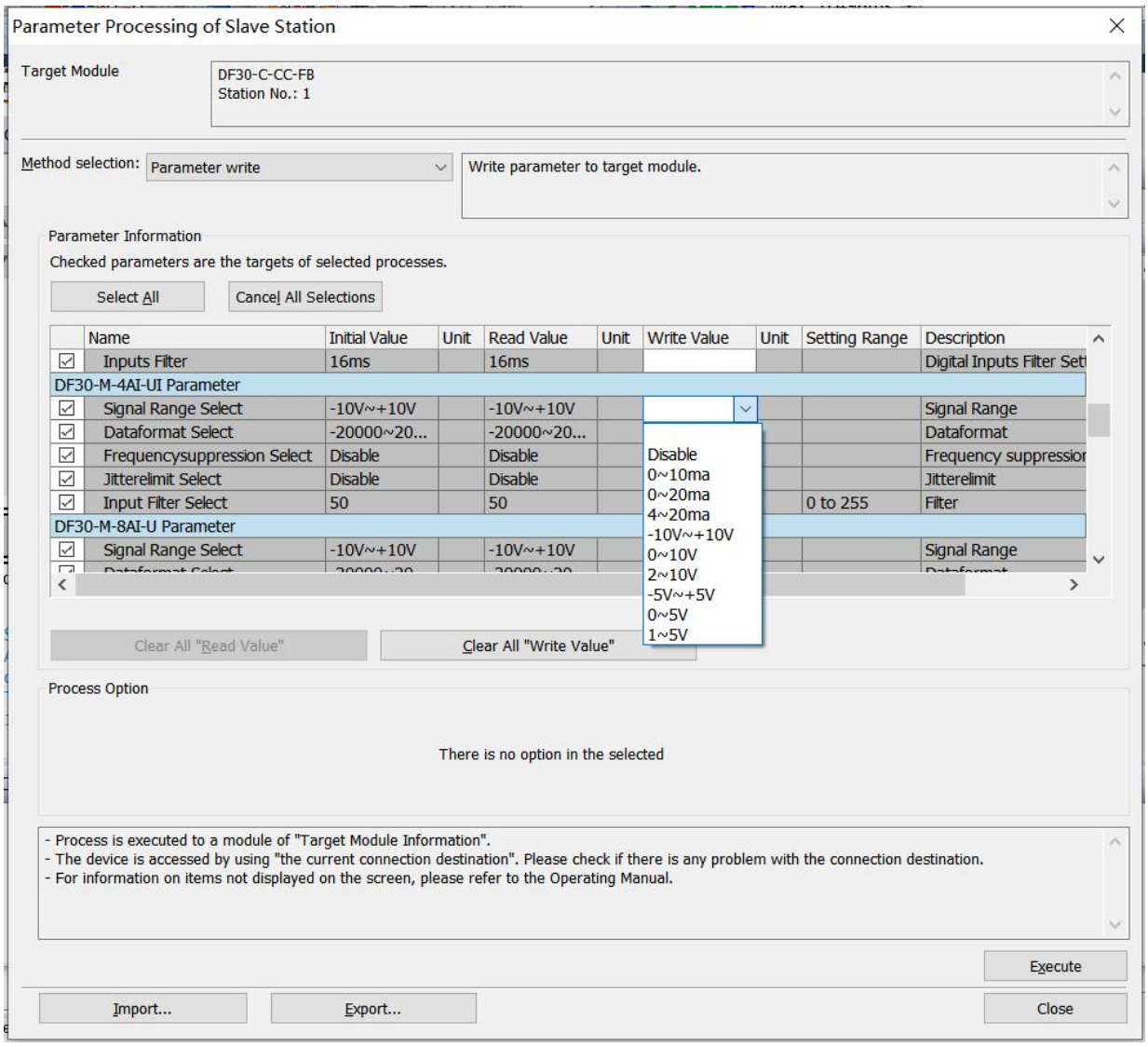

d. Modify the parameters of DF30-M-8AI-U module. This module contains 5 parameters, including the range of the channel, data format, power frequency suppression, filtering level and filtering. Select all 5 parameter options under this module, and choose the corresponding parameters according to the user's requirements. After setting is completed, click "Execute" to save the parameters to the coupler, and simultaneously download the parameters to the controller to make the parameters take effect. As shown in the figure below.

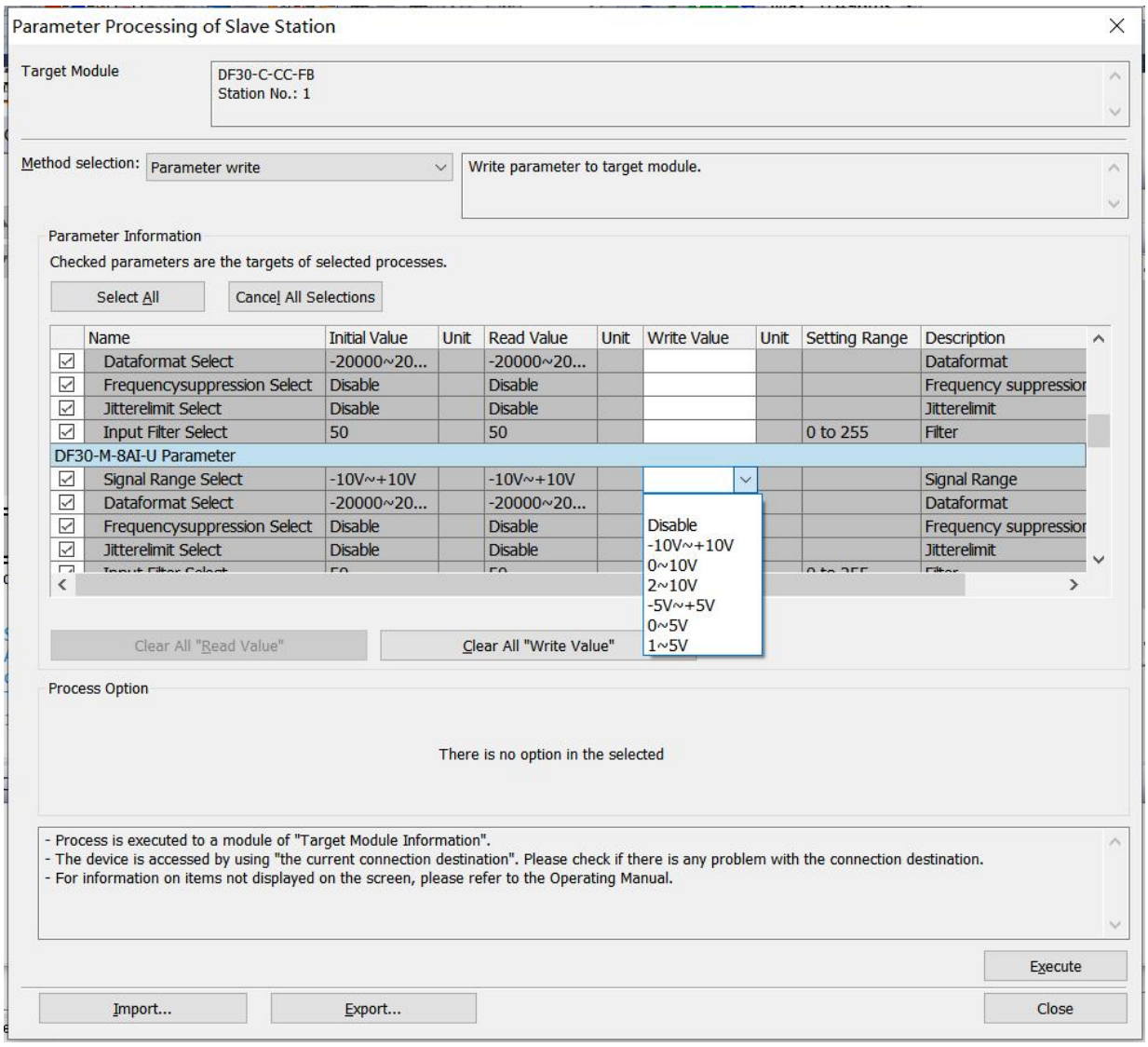

e. Modify the parameters of DF30-M-8AI-I. This module contains 5 parameters, including the range and data format of the channel, power frequency suppression, filtering level and filtering. Select all 5 parameter options under this module. Based on the user's requirements, choose the corresponding parameters. After setting, click "Execute" to save the parameters to the coupler. At the same time, download the parameters to the controller to make them effective. As shown in the figure below.

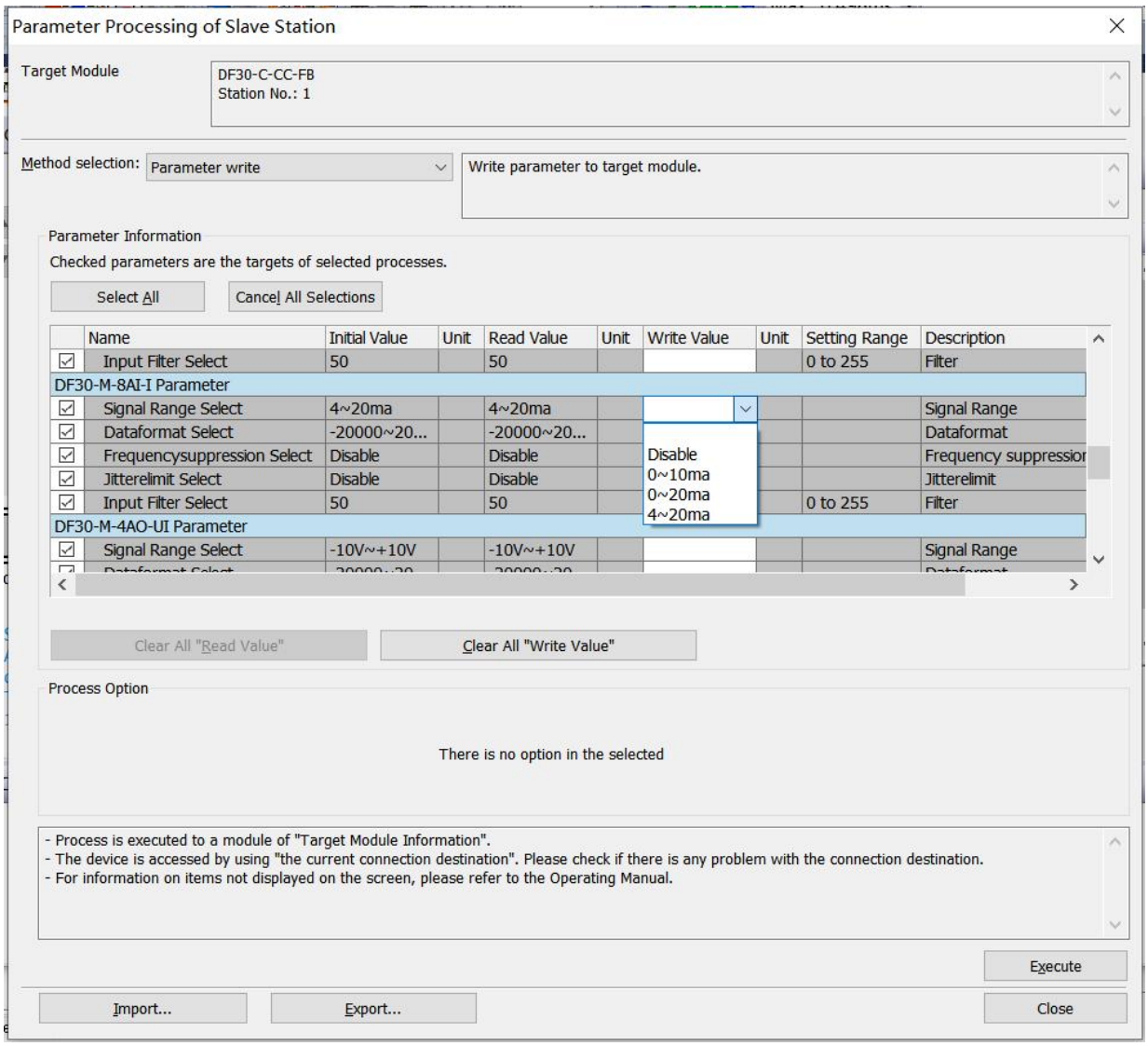

f. Modify the parameters of DF30-M-4AO-UI. This module contains two parameters: the range of the channel and the data format. Select all the options of the two parameters under this module. Based on the user's requirements, choose the corresponding parameters. After setting, click "Execute" to save the parameters to the coupler, and simultaneously download the parameters to the controller to make the parameters take effect. As shown in the figure below.

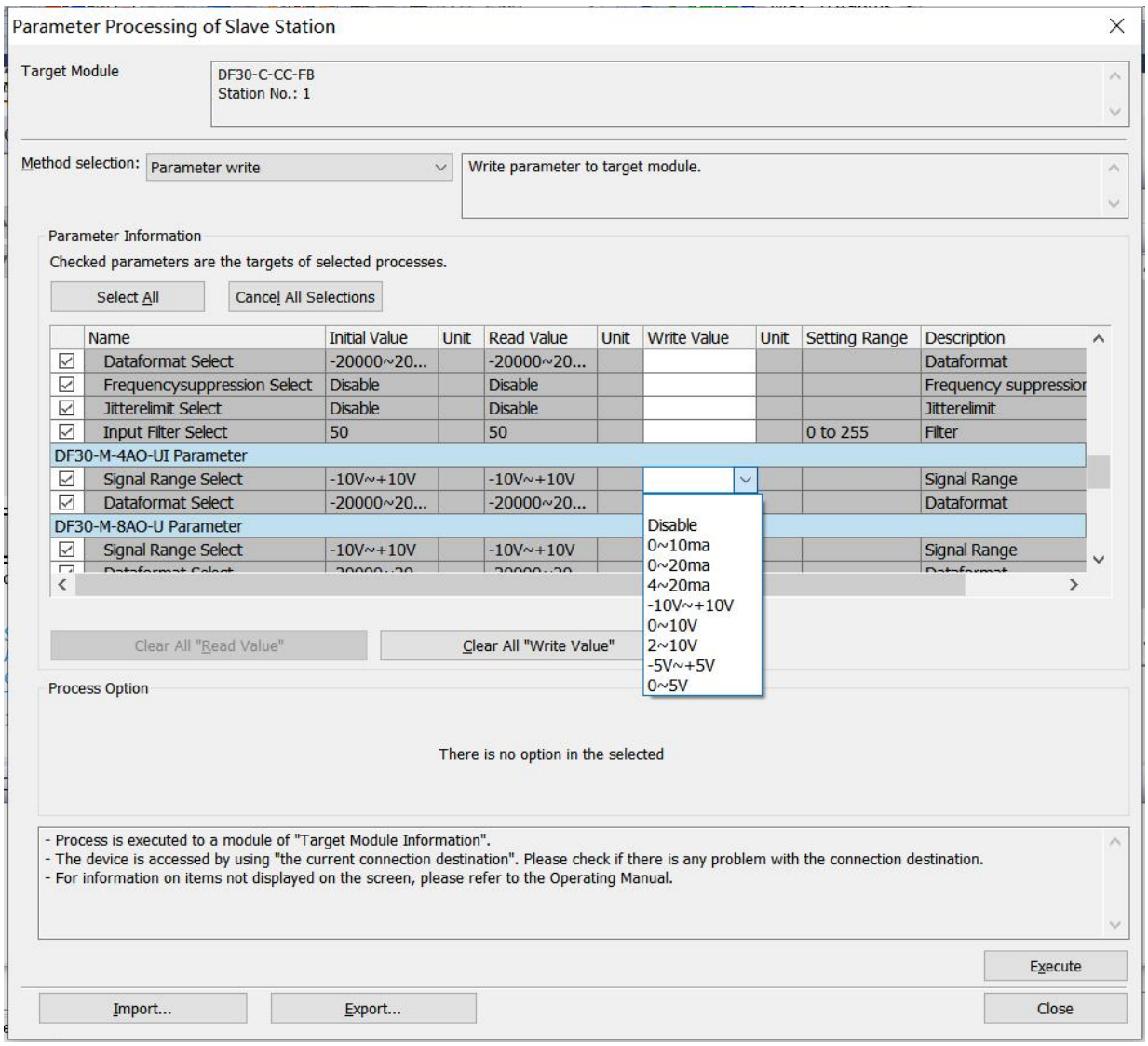

g. Modify the parameters of DF30-M-8AO-U. This module contains 2 parameters: the range of the channel and the data format. Select all the parameter options under this module. Based on the user's requirements, choose the corresponding parameters. After setting, click "Execute" to save the parameters to the coupler. At the same time, download the parameters to the controller to make them effective. As shown in the figure below.

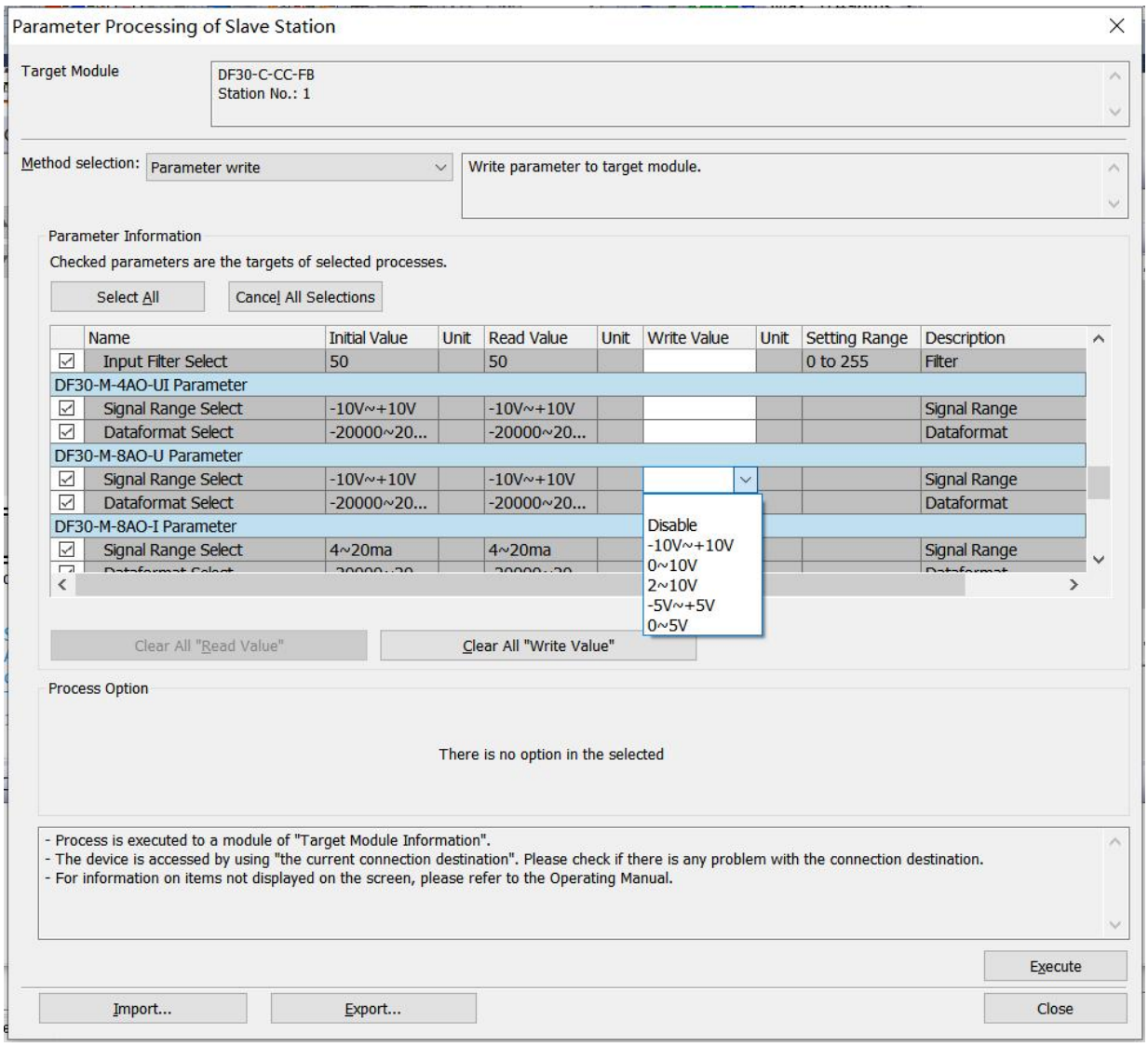

h. Modify the parameters of DF30-M-8AO-I. This module contains 2 parameters: the range of the channel and the data format. Select all 2 parameter options under this module. Based on the user's requirements, choose the corresponding parameters. After setting, click "Execute" to save the parameters to the coupler. At the same time, download the parameters to the controller to make them effective. As shown in the figure below.

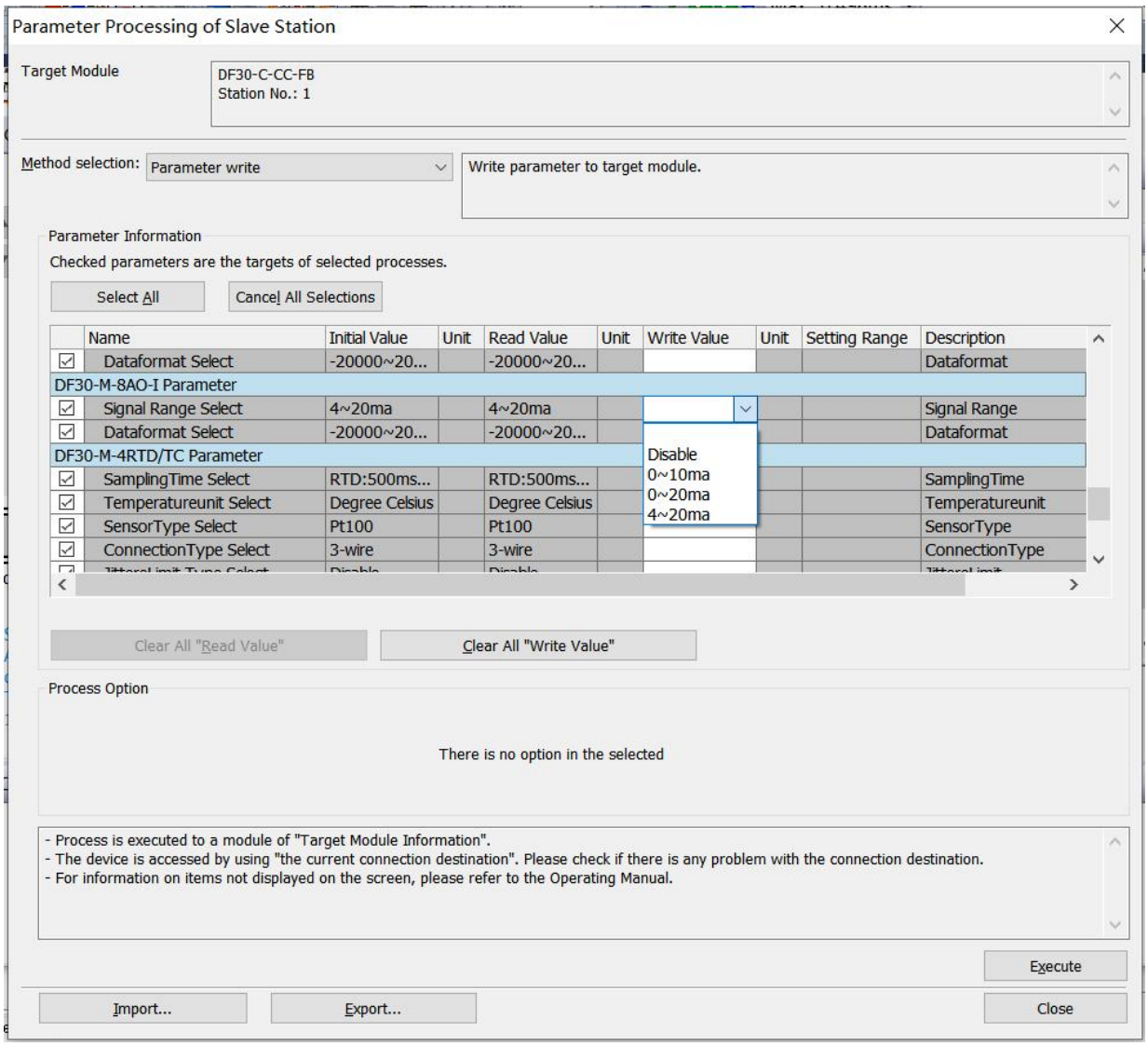

i. Modify the parameters of DF30-M-4RTD/TC. This module contains 6 parameters, including the type of sensor connected, sampling time, temperature unit, connection method, filtering level and filtering. Select all 6 parameter options under this module. Based on the user's requirements, select the corresponding parameters. After setting is completed, click "Execute" to save the parameters to the coupler. At the same time, download the parameters to the controller to make them effective. As shown in the figure below.

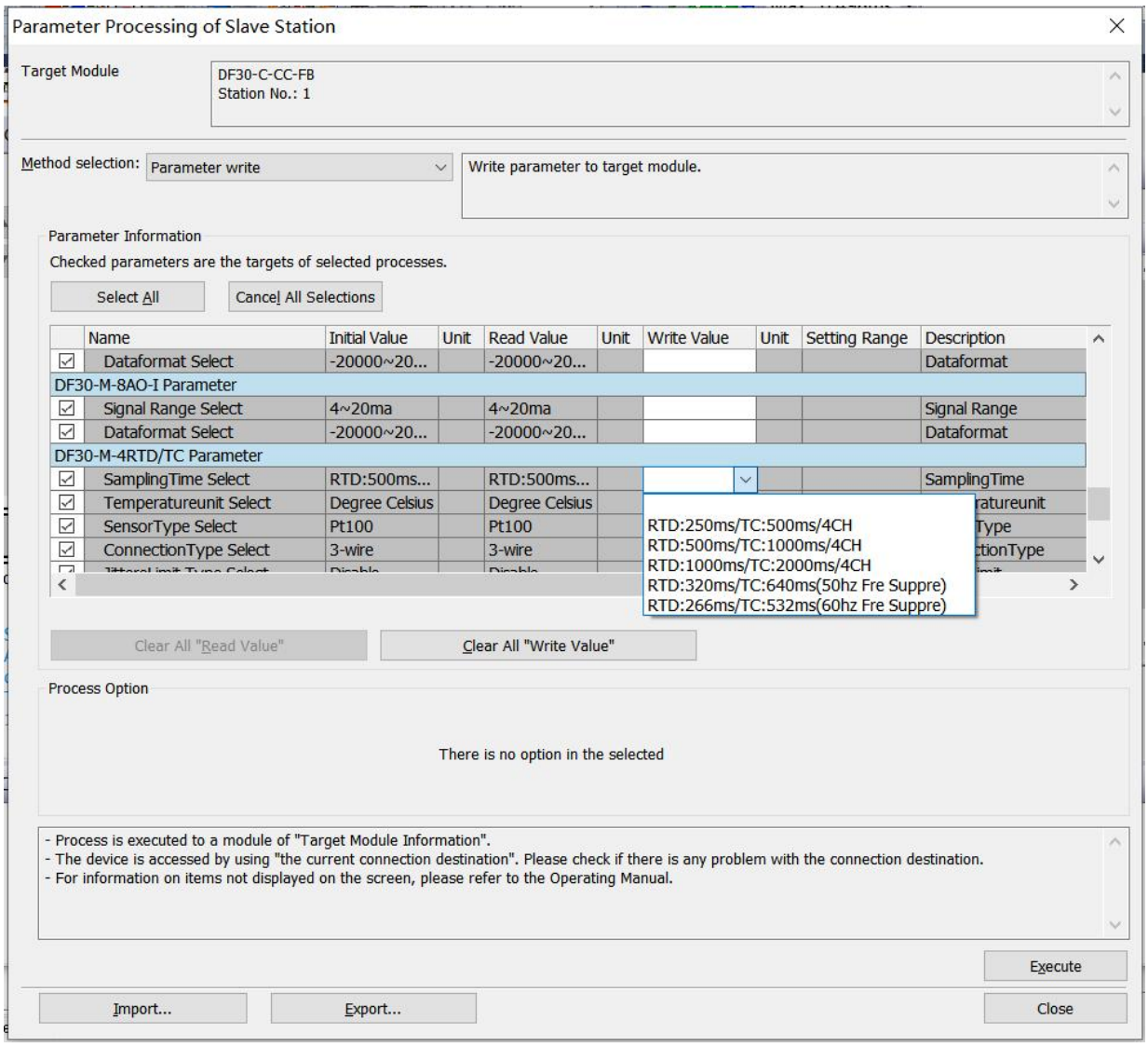

j. Modify the parameters of DF30-M-8TC. This module contains 5 parameters: the type of sensor connected to the module, sampling time, temperature unit, filtering level and filtering. Select all 5 parameter options under this module. Based on the user's requirements, choose the corresponding parameters. After setting is completed, click "Execute" to save the parameters to the coupler. At the same time, download the parameters to the controller to make them effective. As shown in the figure below.

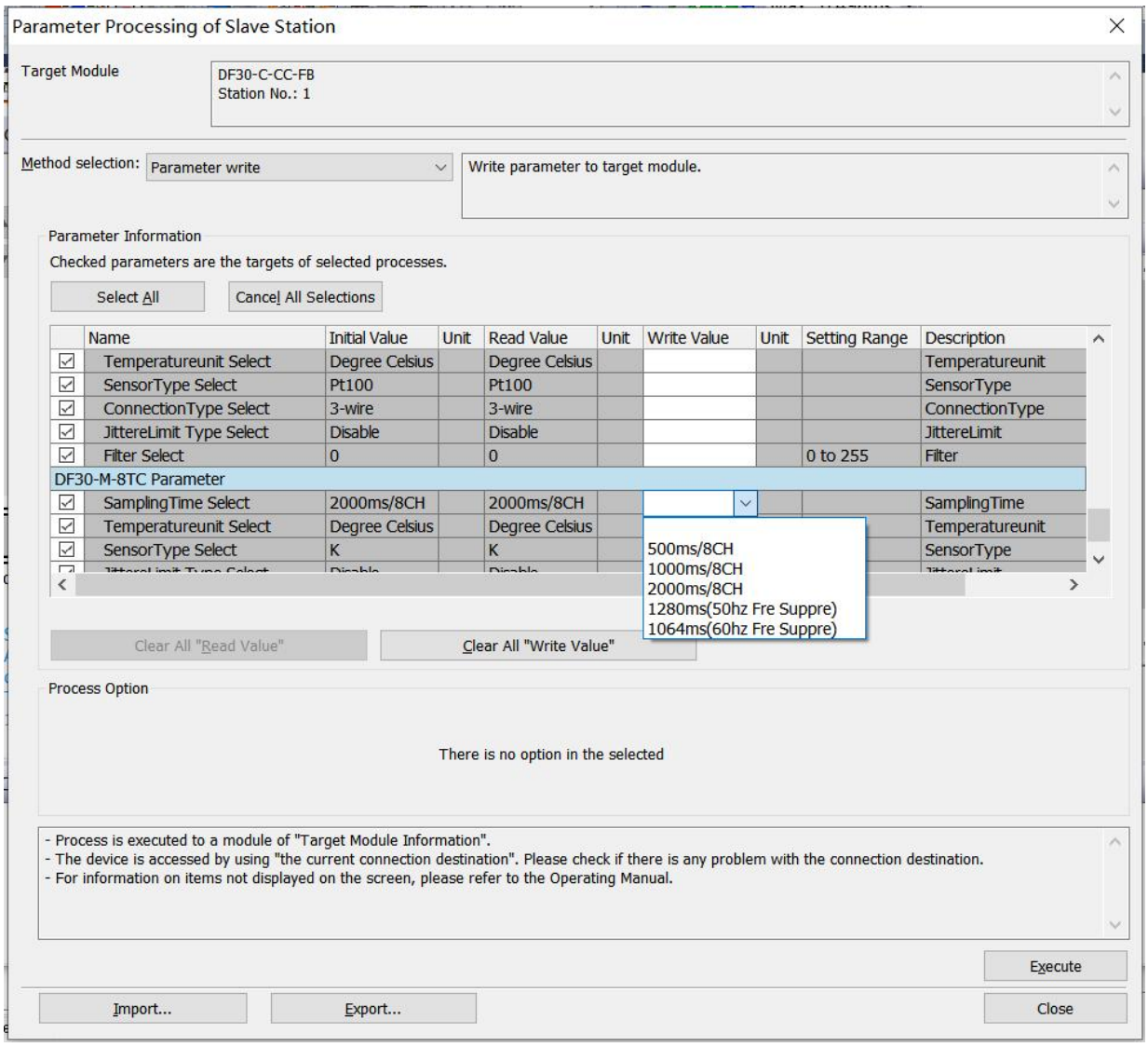

- **Users can also select all the modules that need to have their parameters configured, click "Execute", and the parameters will be saved all at once into the coupler; after the parameter settings are completed, they will be effective for all the modules of this type.**

6.3.5 Configuration Description

Take the topology of DF30-C-CC-FB + DF30-M-16DI-P/N + DF30-M-16DO-P + DF30-M-4AI-UI + DF30-M-4AO-UI as an example to explain the configuration. The detailed configuration process can be referred to Sections 5.2.1 to 5.2.4.

- This topology structure only requires setting up 1 site and 64 points. The starting addresses are respectively:
  - RX: X100
  - RY: Y100

- RWr: D1000
- RWw: D2000

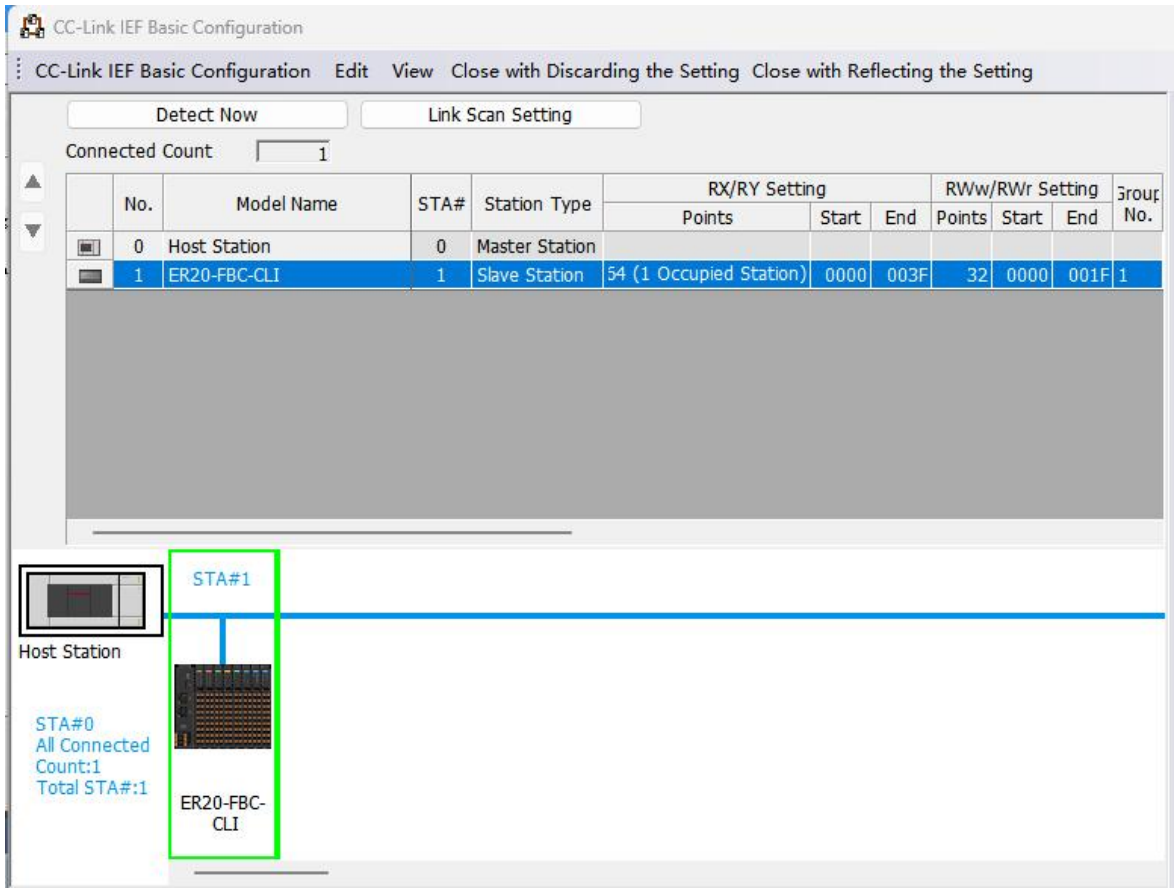

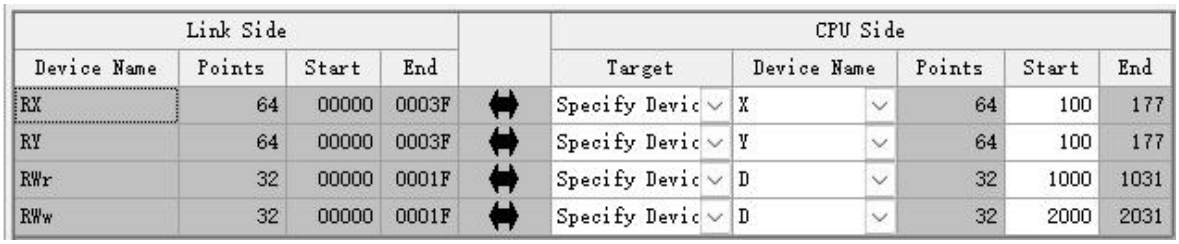

Link Side					CPU Side				
Device Name	Points	Start	End		Target	Device Name	Points	Start	End
RX	64	00000	0003F		Specify Devic	X	64	100	177
RY	64	00000	0003F		Specify Devic	Y	64	100	177
RWr	32	00000	0001F		Specify Devic	D	32	1000	1031
RWw	32	00000	0001F		Specify Devic	D	32	2000	2031

According to the description in Section 5.2 of the module IO data software and channels, the data addresses for input/output data and diagnostic information of each module The explanation is as shown in the table below.

Soft component name	Model number	Occupied address	Data size	Note
RX	DF30-M-16DI-P/N	X100~X107	16bits	X100~X107:DI1~DI8

				X110~X117:DI9~DI16
RY	DF30-M-16DO-P	Y100~Y107 Y110~Y117	16bits	Y100~Y107:DO1~DO8
				Y110~Y117:DO9~DO16
RWr	DF30-C-CC-FB	D1000	1Word	Diagnostic information input data
	DF30-M-4AI-UI	D1001~D1004	4Word	D1001~D1004: AI1~AI4
RWw	DF30-C-CC-FB	D2000	1Word	Diagnostic information output data
	DF30-M-4AO-UI	D2001~D2004	4Word	D2001~D2004: AO1~AO4

Note: For the description of the diagnostic information data, please refer to the appendix.

- The digital input data of DF30-M-16DI-P/N is shown in the following figure.

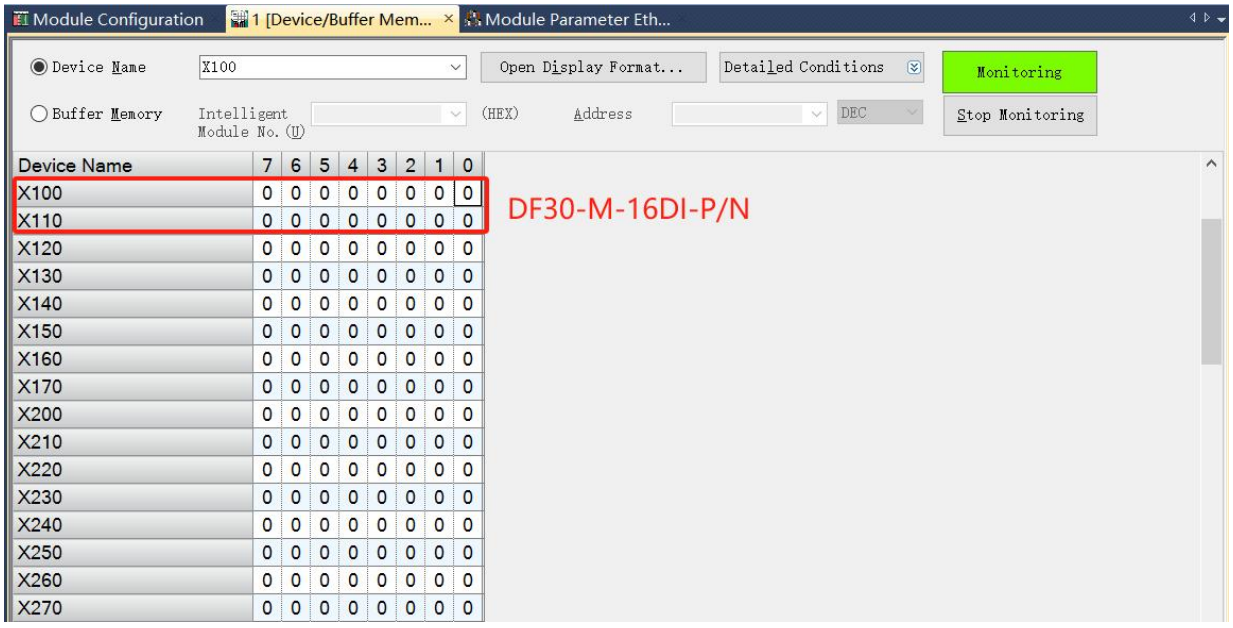

- The digital output data of DF30-M-16DO-P is shown in the following figure.

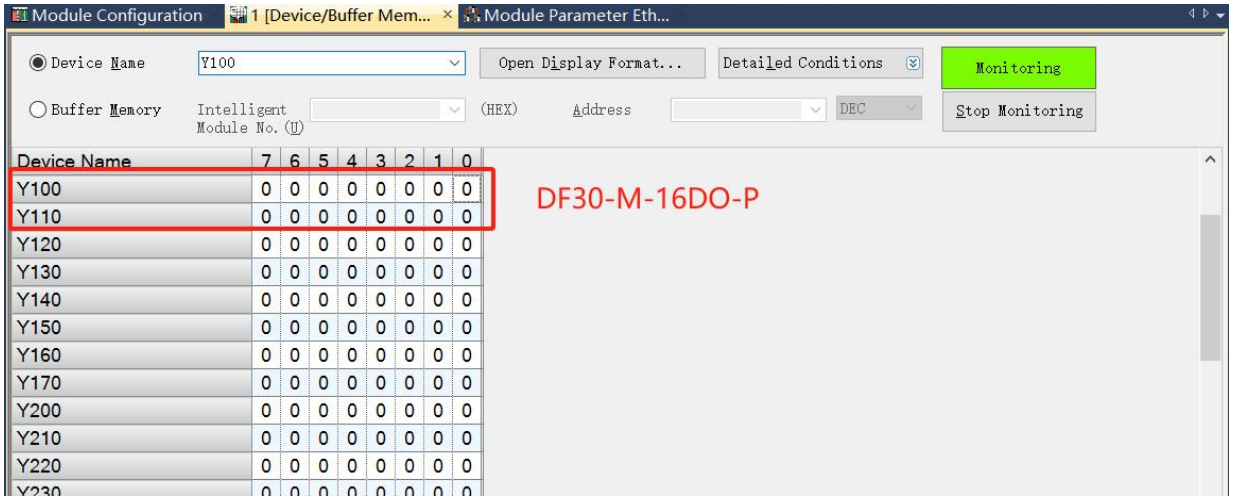

- The analog output data of DF30-M-4AO-UI is shown in the following figure.

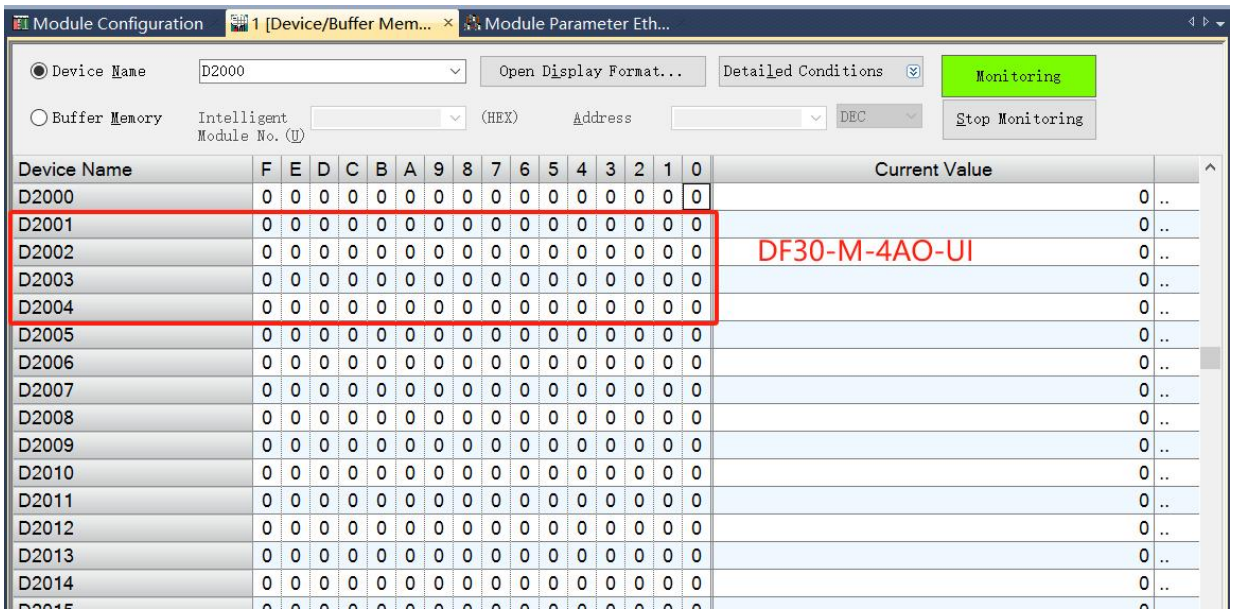

- The analog input data of DF30-M-4AI-UI is shown in the following figure.

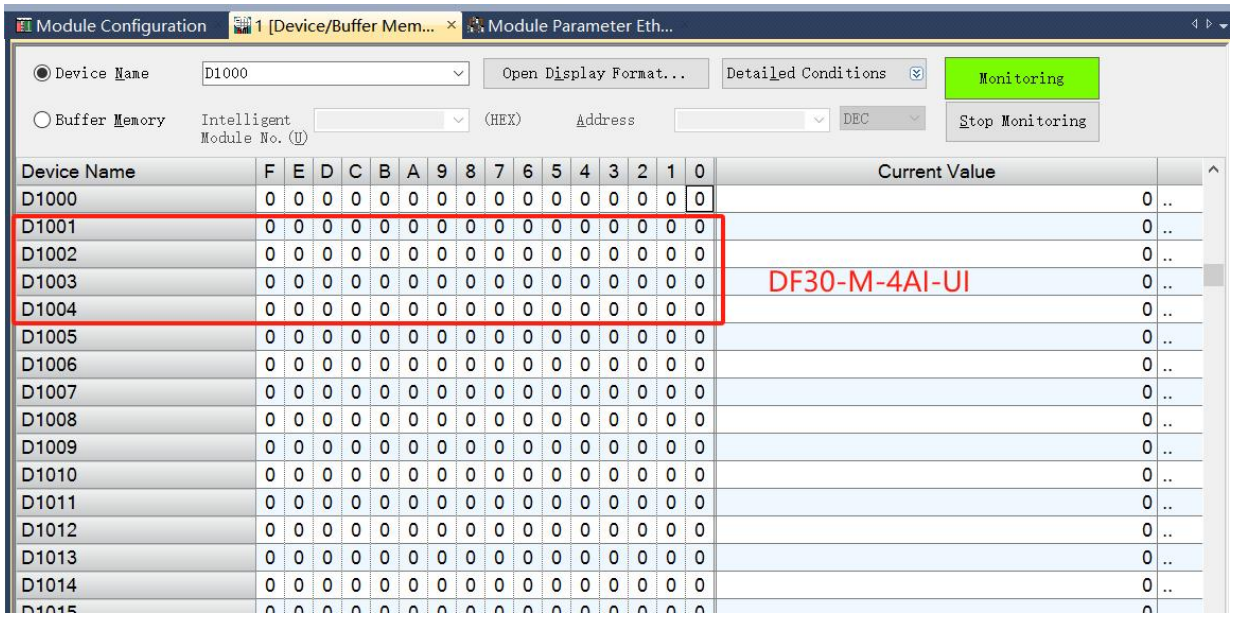

- Diagnostic input data and diagnostic output data

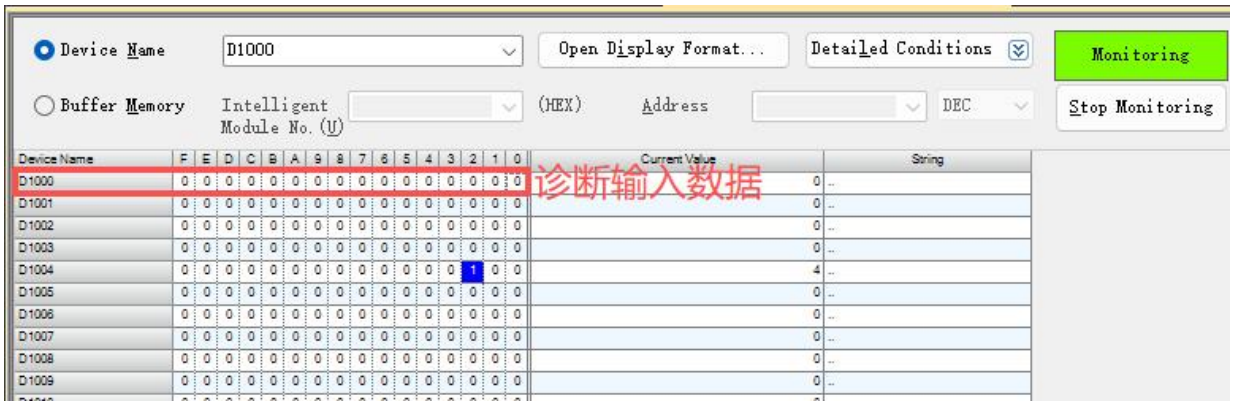

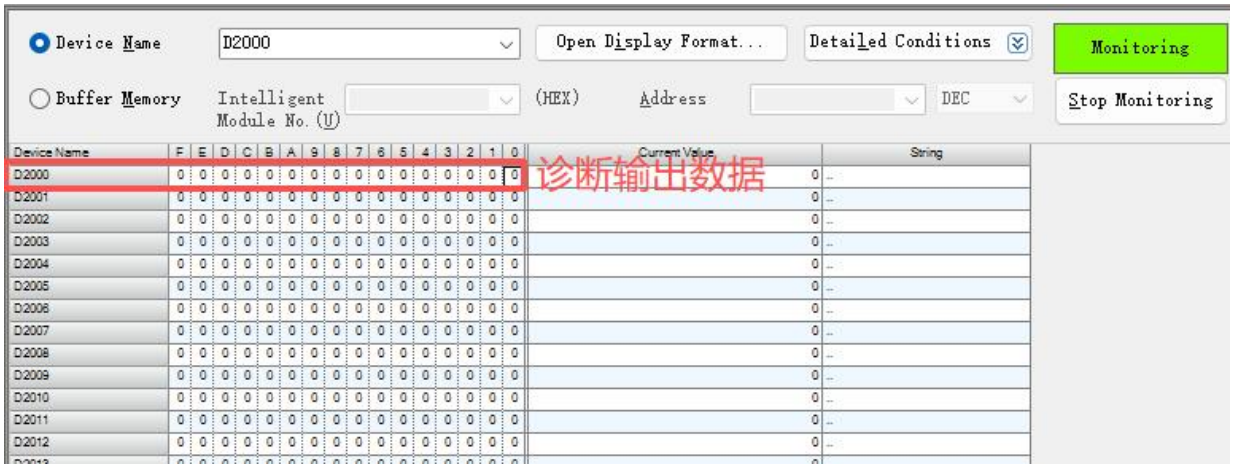

7 Appendix

7.1 Explanation of Fault Codes

Fault location	Fault Name	Trouble code	Solution/Cause
Coupler	The protocol stack is not scanned to the module	1	Check whether the module is tightly plugged in and whether the buckle is fastened
	The number of modules is exceeded	2	Check the number of backplane modules
	The configuration IO module does not match the card that is actually scanned	3	Check whether the type number and sequence of the configuration module are consistent with the actual module
	The configuration configuration list is not downloaded	4	
	Hot-swap failed, and the module type number was wrong	5	Check whether the newly plugged module signal is the same as the original
Module	The backplane bus timed out	1	Check that the module is installed in place
	Flash read failure	3	Power back or contact the vendor
	Wrong configuration parameters	4	Check whether the configuration parameters are reasonable
	Abnormal power supply	5	Check the power supply
	ADC abnormalities	6	Power back or contact the

			vendor
	DAC abnormalities	7	Power back or contact the vendor
Channel	Overcurrent	1	Check if the load is too large
	Overheating	2	Check the external wiring and whether the load is too large
	Short circuit	3	Check the external wiring of the channel
	Open circuit/disconnection	4	Check the external wiring of the channel
	Overflow	5	Check if the external input signal is normal
	Underflow	6	Check if the external input signal is normal
	Hyper Limit	7	Check if the external input signal is normal
	Exceeding the lower limit	8	Check if the external input signal is normal
	Wrong sensor type	9	Check whether the access sensor and the Configure items match