FOR-I755 Rev.I.7

未注公差/General tolerances(mm)														
0 ~ 3	>3 ~ 6	>6 ~ 10	>10 ~ 18	>18 ~ 30	>30 ~ 50	>50 ~ 80	>80 ~ 120	>120 ~ 180	>180 ~ 250	>250 ~ 315	>315 ~ 400	>400 ~ 500	>500	0.1/10
±0.12	±0.18	±0.22	±0.26	±0.31	±0.37	±0.57	±0.80	±0.93	±1.05	±1.15	±1.60	±2.20	±2.50	±2°

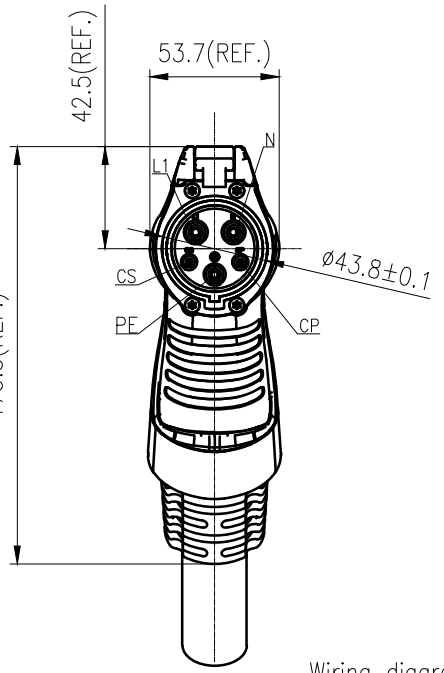

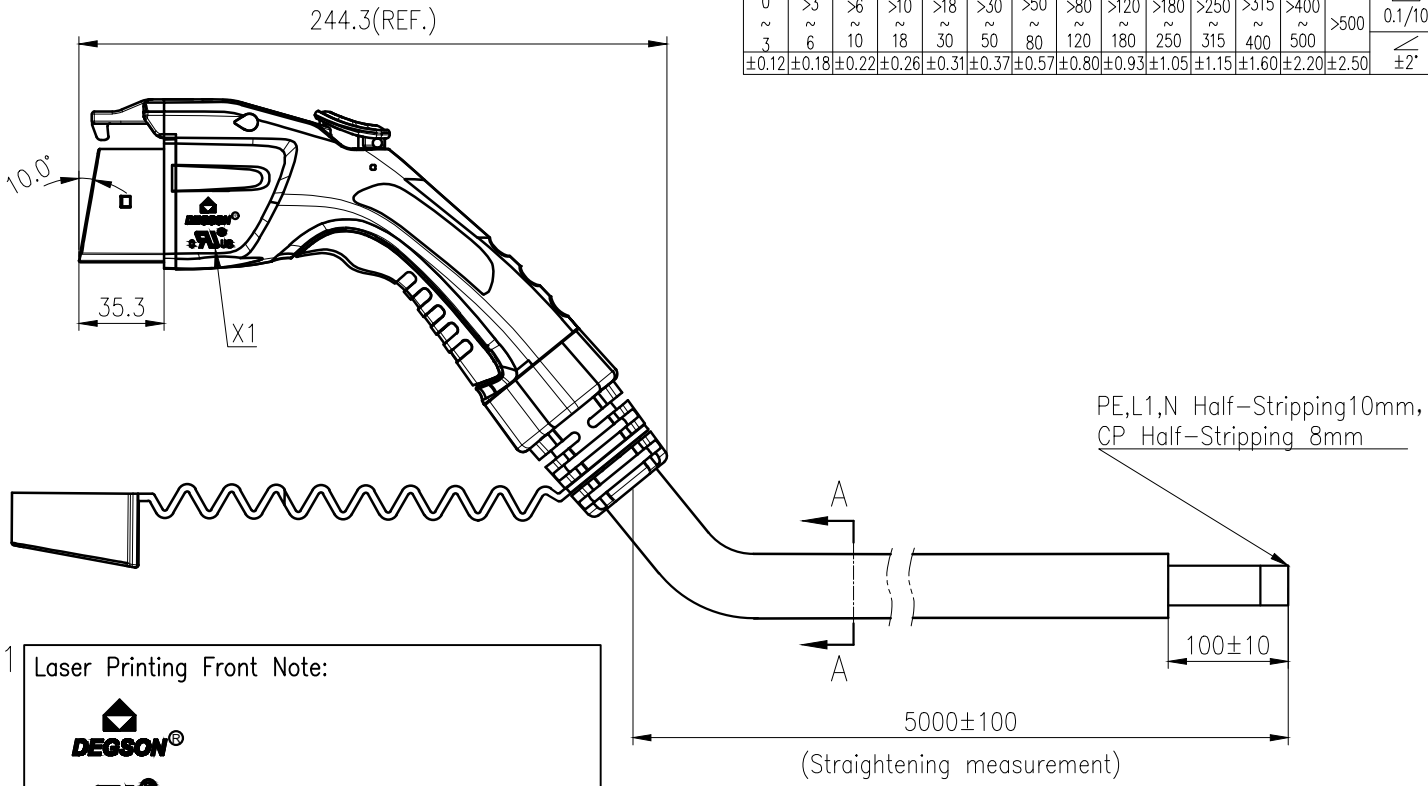

Wiring diagram X1

L1 8AWG Brown
N 8AWG Blue
PE 10AWG Yellow/Green
CP 22AWG Orange

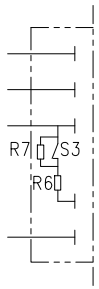

R6=150Ω±3%
R7=330Ω±3%

A-A

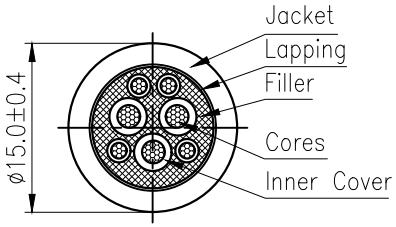

Laser Printing Front Note:

DEGSON®

cULus

Laser Printing Back Note(Arial):

MAAC-S-050A-V5-03-5.0M-10AH
50A 250V AC
SAE J1772:2017
TYPE 4
20xxxxxx-xxxx
CAUTION-Do not use this product
if any damage
ATTENTION - n'utilisez pas ce
produit s'il y a des dommages

额定电压电流/Rated voltage/Current	250V AC/50A
绝缘电阻/Insulate resistance	>100MΩ,500V DC 1min
耐压/Withstanding voltage	L、N and PE ,2500V AC 1min L and N ,2500V AC 1min
防护等级/Ingress protection	TYPE 4
插拔寿命/Insertion/Pullout times	10,000 Times
插拔力/Insertion/Pullout force	<75N
使用温度范围/Operating temperature(°C)	-30~+50
线材规格/Cable specification	2*8AWG+1*10AWG+4*22AWG Black
标准/Reference standard	SAE J1772:2017
符合RoHS环保要求/Conform to RoHS	Yes

REV	ECN	DESCRIPTION	DRFT	DATE

DEGSON

APPD:	Ye DB	2024.9.18
CHKD:	Dong RT	2024.9.18
DRFT:	ZhouC	2024.08.13
A4		mm (inch)

MATERIAL: SURFACE/COLOR:
MAT NO./REV: D0-1 MAT STATUS:

NAME: MAAC-S-050A-V5-03-5.0M-10A(H)

DRAWING NO.	TYPE	DRAWING STATUS	SCALE	SHEET
	CUSTOMER DRAWING		1:3	1/1

Transfer or duplication of this document as well as the utilization or communication of its contents are prohibited unless explicit authorization is granted. Violations will be liable for compensation. All rights reserved for patent, utility model or designs registrations. 除非给予明确授权，否则禁止转让、复制、利用、交流本文件的内容。侵犯者将负赔偿责任。本公司保留对涉及发明、实用新型和外观专利的所有权利。