Transfer or application of this document as well as the utilisation or communication of its contents are prohibited unless explicit authorisation is granted. Violations will be liable for compensation. All rights reserved for patent, utility model or design registration. 未经授权不得转载、复制、传播、交换或以其他目的使用。违反者将要赔偿损失。版权所有，专利授权、实用新型或外观设计注册。

未注公差/General tolerances(mm)																
0 ~ 3	>3 ~ 6	>6 ~ 10	>10 ~ 18	>18 ~ 30	>30 ~ 50	>50 ~ 80	>80 ~ 120	>120 ~ 180	>180 ~ 250	>250 ~ 315	>315 ~ 400	>400 ~ 500	>500	0.1/10
±0.12	±0.18	±0.22	±0.26	±0.31	±0.37	±0.57	±0.80	±0.93	±1.05	±1.15	±1.60	±2.20	±2.50	∠ ±2°

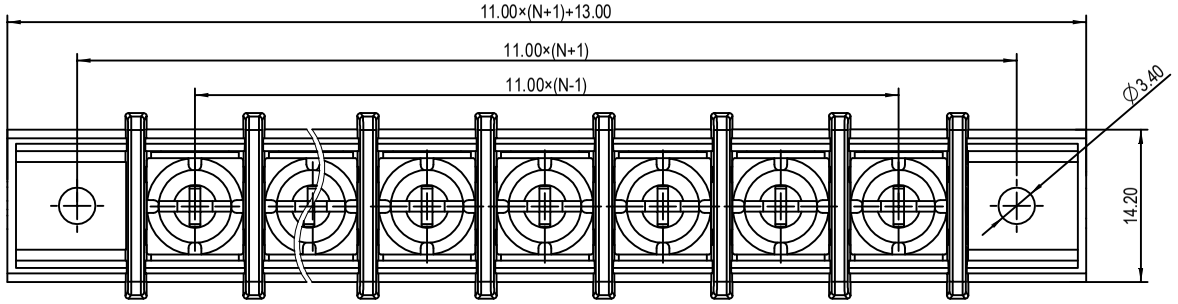

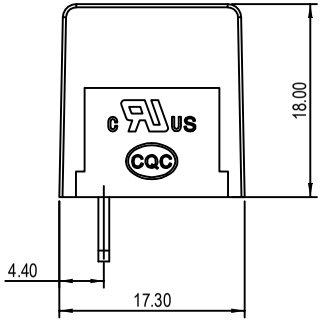

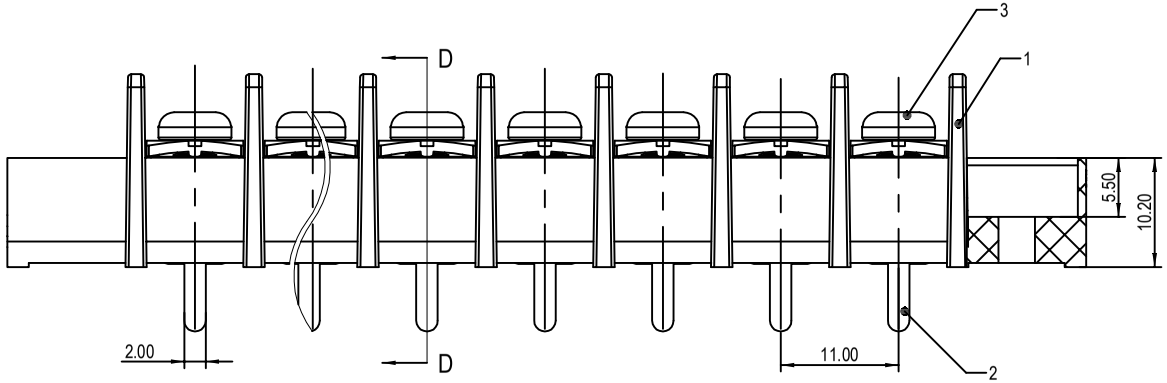

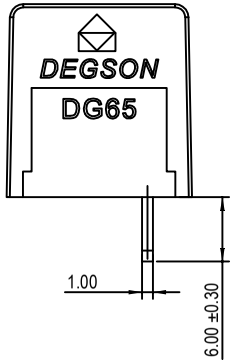

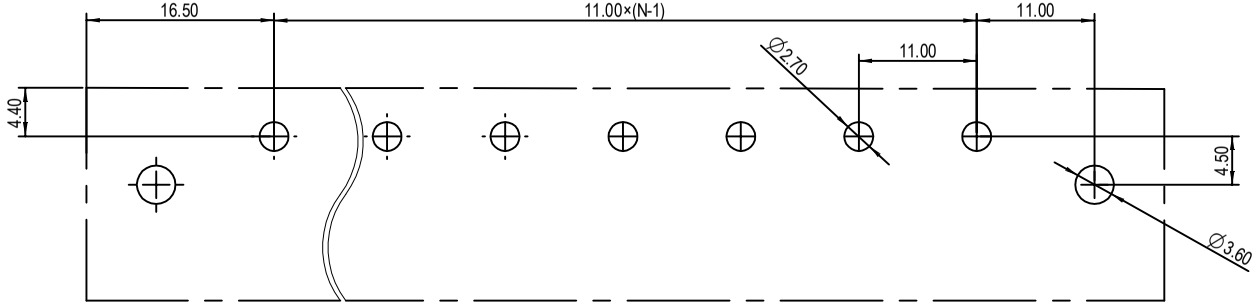

PCB LAYOUT

Note: The A&Z(H) in the name means :A(H) and Z(H).

ITEM	NAME OF PART	MATERIAL	NOTES
3	Screw	Steel	Ni Plated
2	Pin header	Copper alloy	Sn Plated
1	Housing	PA66	UL94V-0

UL 标准/UL Standard:	B	C	D
额定电压/电流/Rated Voltage(V)/Current(A)	300/15	/	300/10
螺丝扭矩/Torque Tightening(N·m/Lb.in)	M4, 1.19/10.53		
线径范围(硬线和软线)/Wire Range(rigid and flexible)(AWG)	22~10		
间距/Pitch(mm)/线数范围/Poles	11.00/N=02~20P		
剥线长度/Stripping length(mm)	11~13		
使用温度范围/Operating temperature(°C)	-40~+105		
符合RoHS环保要求/Conform to RoHS	Yes		

REV	ECN	DESCRIPTION	DRFT	DATE
00	/	/	/	/

DEGSON

APPD: 核准人	核准日期	MATERIAL: /	SURFACE/COLOR: /
CHKD: 审核人	审核日期	MAT NO./REV: / /	MAT STATUS: /
DRFT: 设计人	设计日期	NAME: DG65S-A-XXP-1Y-00A&Z(H)	

DRAWING NO.	TYPE	DRAWING STATUS	SCALE	SHEET
200239861	CUSTOMER DRAWING	已发布	1:1	1/1

A3 mm (inch)

1 2 3 4 5 6 7 8