Transfer or duplication of this document as well as the utilization or communication of its contents are prohibited unless explicit authorization is granted. Violations will be liable for compensation. All rights reserved for patent, utility model or designs registrations. 除非给予明确授权，否则禁止转让、复制、利用、交流本文件的内容，侵犯者将负赔偿责任。本公司保留对涉及实用、实用新型和外观专利的所有权利。

未注公差/General tolerances(mm)														
0 ~ 3	>3 ~ 6	>6 ~ 10	>10 ~ 18	>18 ~ 30	>30 ~ 50	>50 ~ 80	>80 ~ 120	>120 ~ 180	>180 ~ 250	>250 ~ 315	>315 ~ 400	>400 ~ 500	>500	0.1/10
±0.12	±0.18	±0.22	±0.26	±0.31	±0.37	±0.57	±0.80	±0.93	±1.05	±1.15	±1.60	±2.20	±2.50	±2°

PCB LAYOUT

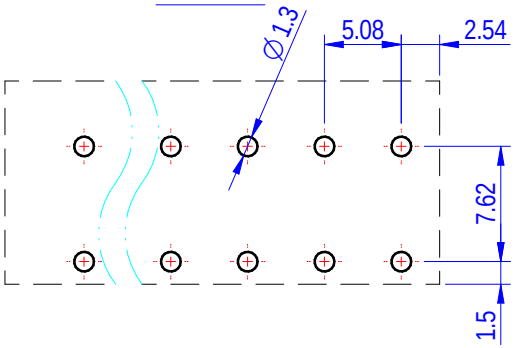

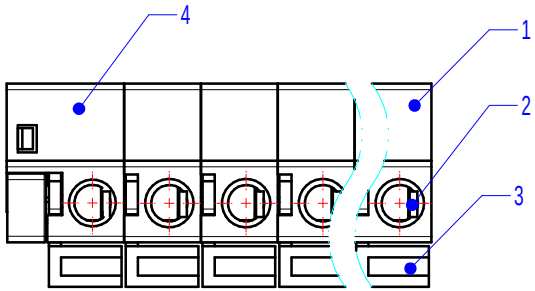

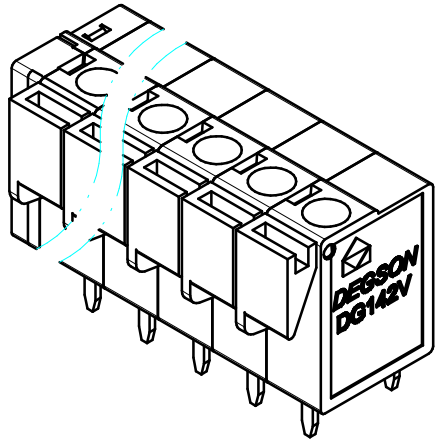

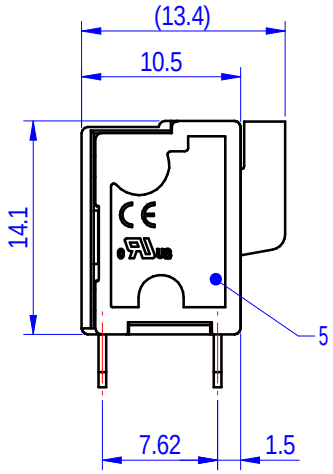

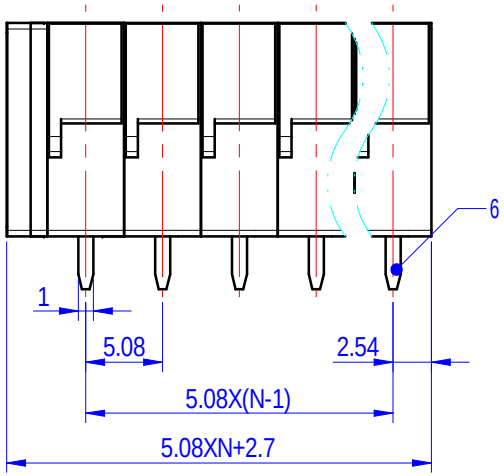

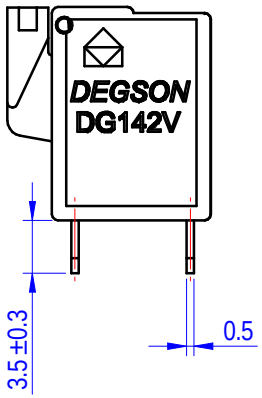

ITEM	NAME OF PART	MATERIAL	NOTES
6	Pin header	Copper alloy	Sn plated
5	Cover	PA66	UL94V-0
4	Housing2	PA66	UL94V-0
3	Button	PA66	UL94V-0
2	Spring	Stainless steel	/
1	Housing1	PA66	UL94V-0

UL标准/UL Standard:	B	C	D
额定电压/电流/Rated Voltage(V)/Current(A)	300/10	300/10	300/10
IEC标准/IEC Standard:			
过压类别/Overvoltage Category/污染等级/Pollution Degree	III/3	III/2	II/2
额定电压/电流/Rated Voltage(V)/Current(A)	320/15	320/15	630/15
额定脉冲电压(KV)/Rate Impulse Voltage(KV)	4	4	4
工频耐压/Withstanding Voltage(V/Min)	AC1600		
线径范围(硬线和软线)/Wire Range(rigid and flexible)(AWG/mm²)	22~ 16 / 0.2~ 1.5		
间距/Pitch(mm)/线数范围/Poles	5.08/N= 02~ 24P		
剥线长度/Stripping length(mm)	10		
使用温度范围/Operating temperature(°C)	-40~ + 105		
符合RoHS环保要求/Conform to RoHS	Yes		

REV	ECN	DESCRIPTION	DRFT	DATE
02		1X更正盖板序号位置	龚徐涛	2023.12.14

DEGSON

APPD:	兰春华	2023.12.20
CHKD:	陈招	2023.12.19
DRFT:	龚徐涛	2023.12.14

A4 mm (inch)

MATERIAL: SURFACE/COLOR:

MAT NO./REV: / 00 MAT STATUS: work

NAME: DG142V-5.08-XXP-1Y-1000A&Z(H)

DRAWING NO.	TYPE	DRAWING STATUS	SCALE	SHEET
200029100	CUSTOMER DRAWING	已发布	2:1	1/1