未注公差/General tolerances(mm)														
0 ~ 3	>3 ~ 6	>6 ~ 10	>10 ~ 18	>18 ~ 30	>30 ~ 50	>50 ~ 80	>80 ~ 120	>120 ~ 180	>180 ~ 250	>250 ~ 315	>315 ~ 400	>400 ~ 500	>500	0.1/10
±0.12	±0.18	±0.22	±0.26	±0.31	±0.37	±0.57	±0.80	±0.93	±1.05	±1.15	±1.60	±2.20	±2.50	±2°

PCB LAYOUT

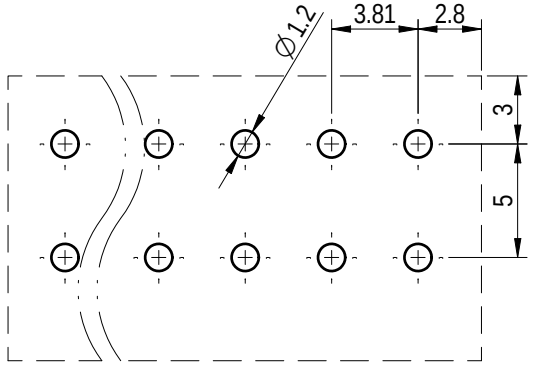

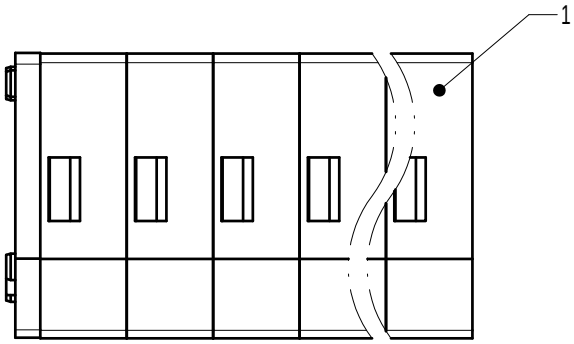

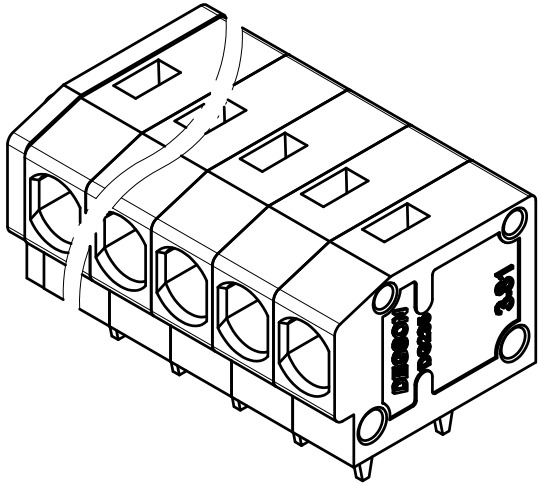

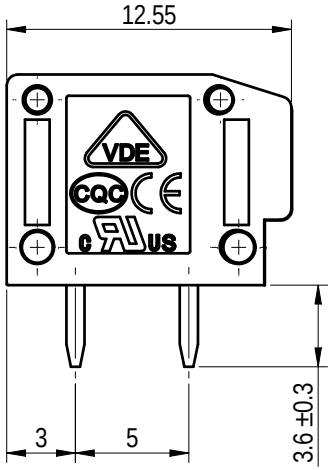

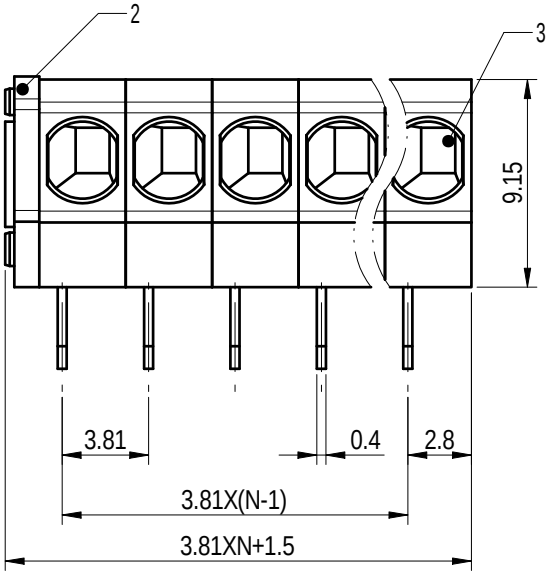

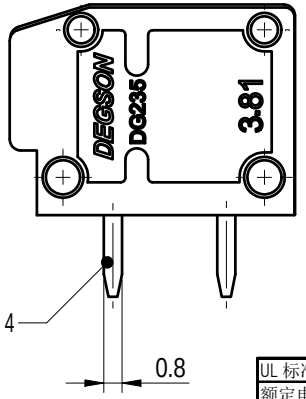

Note:
The A&Z(H) in the name means: A(H) and Z(H).

ITEM	NAME OF PART	MATERIAL	NOTES
4	Pin header	Copper alloy	Sn plated
3	Spring	Stainless steel	/
2	Cover	PA66	UL94V-0
1	Housing	PA66	UL94V-0

UL 标准/UL Standard:	B	C	D
额定电压/电流/Rated Voltage(V)/Current(A)	300/5	150/5	300/5
IEC 标准/IEC Standard:			
过压类别/Overvoltage Category/污染等级/Pollution Degree	III/3	III/2	II/2
额定电压/电流/Rated Voltage(V)/Current(A)	/	250/10	/
额定工频耐压/Withtanding Voltage(V/1Min)	AC2000		
线径范围(硬线和软线)/Wire Range(rigid and flexible)(AWG/mm²)	20~18 / 1.5		
间距/Pitch(mm)/线数范围/Poles	3.81/N=02~24P		
剥线长度/Stripping length(mm)	10		
使用温度范围/Operating temperature(°C)	-40~+105		
符合RoHS环保要求/Conform to RoHS	Yes		

REV	ECN	DESCRIPTION	DRFT	DATE
00			龚徐涛	2022.11.11

DEGSON

APPD:	兰春华	2022.11.14
CHKD:	陈招	2022.11.11
DRFT:	龚徐涛	2022.11.11

A4 mm (inch)

MATERIAL:
SURFACE/COLOR:
MAT NO./REV: / 00
MAT STATUS: 批量

NAME: DG235W-3.81-XXP-1Y-00A&Z(H)

DRAWING NO.	TYPE	DRAWING STATUS	SCALE	SHEET
200029166	CUSTOMER DRAWING	已发布	3:1	1/1

Transfer or duplication of this document as well as the utilization or communication of its contents are prohibited unless explicit authorization is granted. Violations will be liable for compensation. All rights reserved for patent, utility model or designs registrations. 除非经书面授权，否则禁止转让、复制、利用、交流本文件的内容。侵犯者将负赔偿责任。本公司保留对涉及发明、实用新型和外观专利的所有权利。